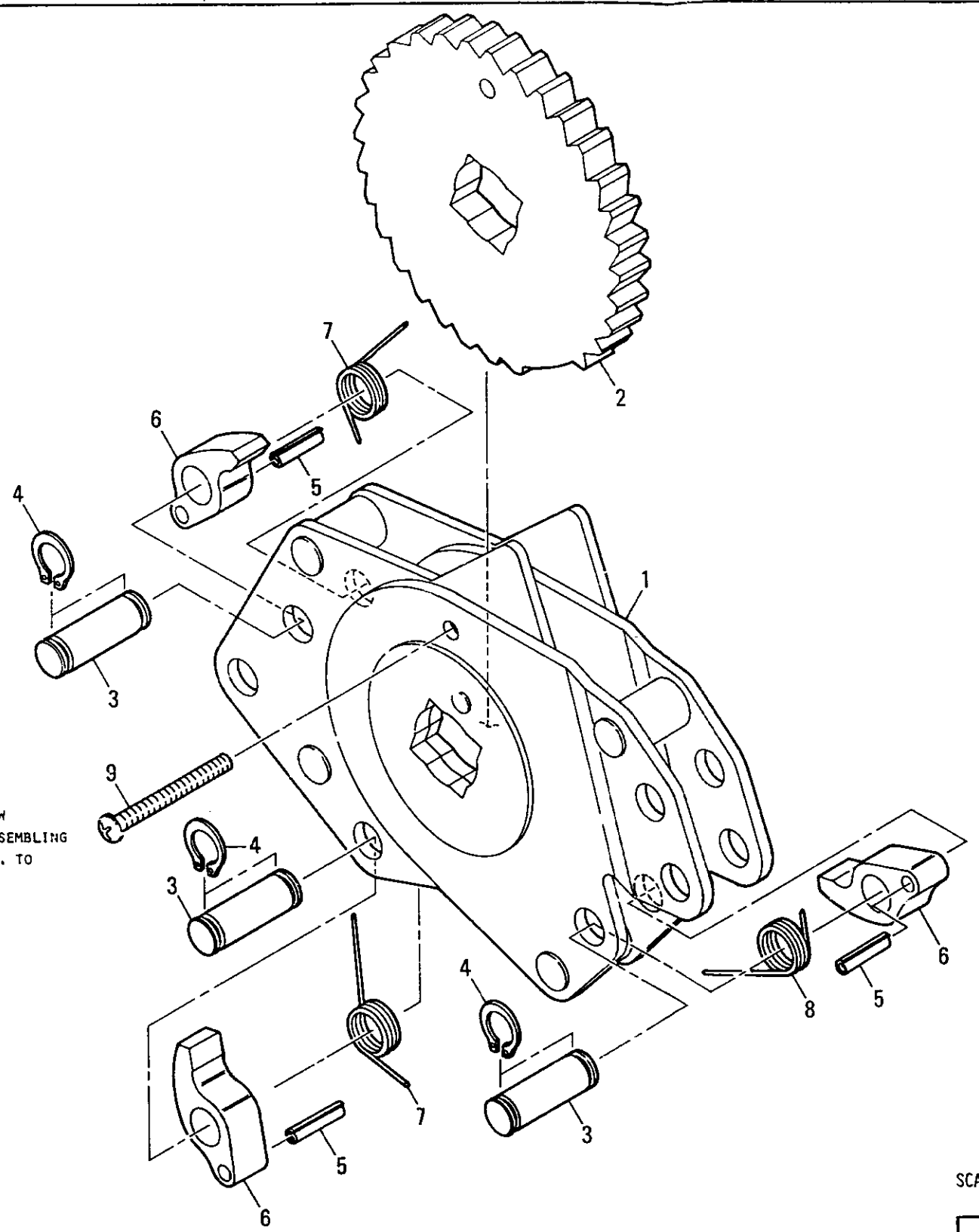

NOTE:
REMOVE ALIGNMENT SCREW (ITEM NO. 9) AFTER ASSEMBLING RATCHET AND PAWL ASSY. TO MECHANISM SIDE FRAME.

PARTS LIST

ITEM NO.	PART NO.	QTY	DESCRIPTION
1	715401-K1	1	BEARING AND CARRIER ASSY.
2	714456-A	1	RATCHET PLATE
3	714471-A	3	PIN (372 X 1.125 LG.)
4	650440-G	6	RETAINER
5	650044-C	3	PIN, SPIRAL (.156 X 9/16 LG.)
6	192307-A	3	PAWL
7	714240-A	2	SPRING, TORSION
8	714240-B	1	SPRING, TORSION
9	54343-C13	1	SCREW, RD HD (8-32 X 1.50 LG.)

SCALE: FULL SIZE

STANDARD TOLERANCE INFO ON OR 52016
TOLERANCES - UNLESS OTHERWISE SPECIFIED 3 PL DEC. ±
DIMENSIONS ARE IN INCHES
2 PL DEC. ±

RATCHET AND PAWL ASSY.

(T12) LK

BBC BROWN BOVERI Brown Boveri Electric, Inc.
Manufacturer of I-T-E Electrical Power Equipment

L-11509 | 2
SHEET NO. 1 of 1 CONT. ON REV.

NEW ASSY. L-11819
S.O. EPL 713913-T12

BY R. Boyer DATE 7-8-82
CHD. DATE 7-19-82
APP. DATE 7-19-82
MICRO.

THIS DRAWING IS THE PROPERTY OF BROWN BOVERI ELECTRIC, INC AND CONTAINS PROPRIETARY AND CONFIDENTIAL INFORMATION WHICH MUST NOT BE DUPLICATED USED OR DISCLOSED OTHER THAN AS EXPRESSLY AUTHORIZED BY BROWN BOVERI ELECTRIC, INC

NO.	REVISIONS	BY & DATE
2	REVISED & REDRAWN (NEW CONFIG.)	RJB 7-8-82

PARTS LIST

ITEM NO.	PART NO.	QTY.	DESCRIPTION
1	54437-H	2	NUT, HEX HD (.375)
2	53103-H	2	LOCKWASHER (.375)
3	713836-A	2	SHIELD (UPPER LEAD)
4	712136-A	2	SUPPORT (UPPER LEAD)
5	712121-A	2	RETAINER
6	712493-A	8	RETAINER (PRIMARY CONT.)
7	712181-C	8	SPRING (PRIMARY & MAIN)
8	712492-A	16	CONTACTS (PRIMARY & MAIN)
9	714410-A	2	UPPER LEAD
10	712495-B	8	PLATE STOP
11	713171-A	8	PIN (SELF RETAINING)
12			
13	54383-C6	2	SCREW, HEX HD. (.375)
14	713171-B	1	PIN (SELF RETAINING)
15	712513-A	2	RETAINER (ARC CONTACT)
16	712116-C	2	SPRING
17	714626-K1	1	CONTACT ASSY, ARC (R.H.)
18	712126-A	1	PLATE STOP
19	714626-K2	1	CONTACT ASSY, ARC (L.H.)
20	713064-A	1	SHIELD (UPPER TERMINAL)

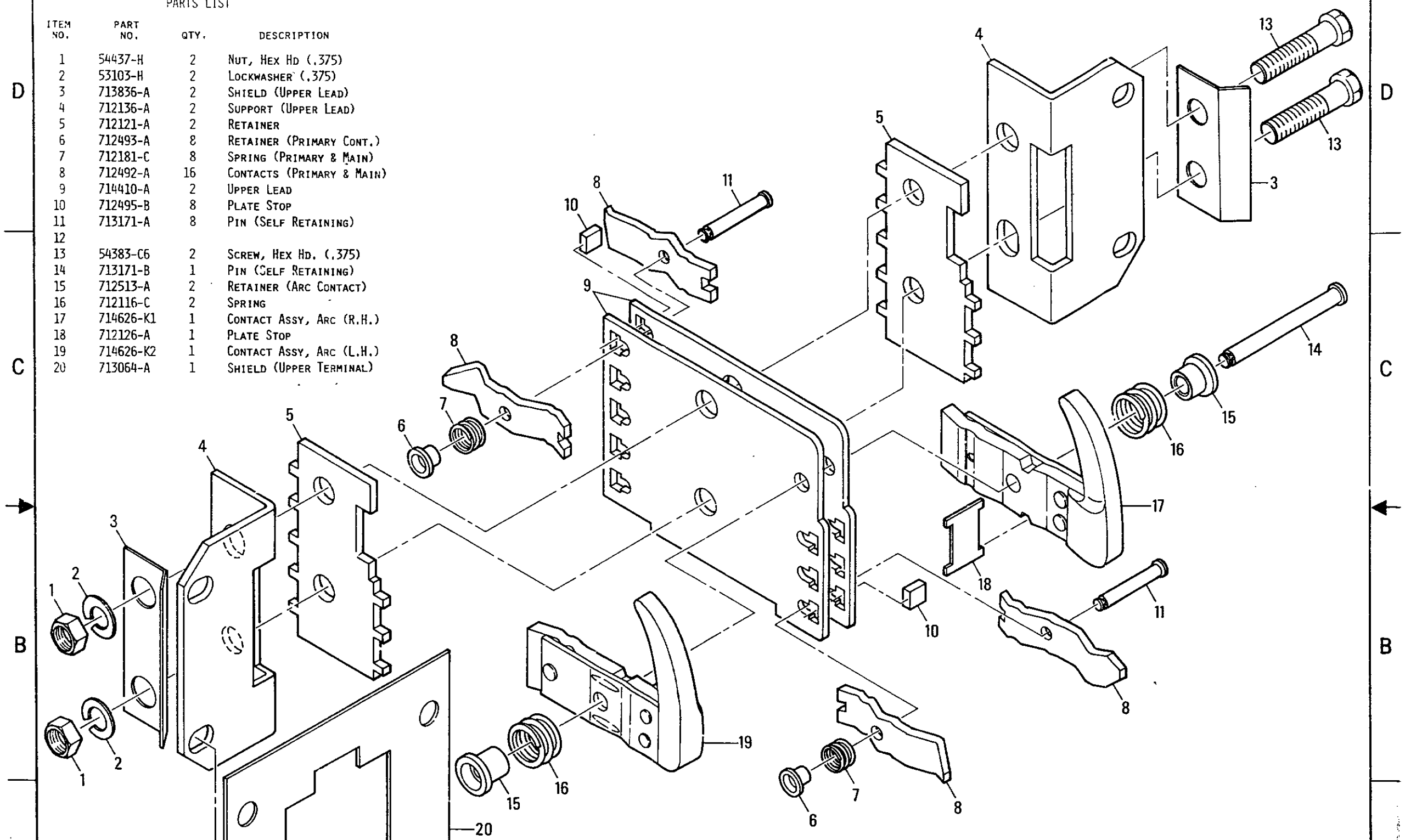

NO.	REVISIONS	BY & DATE	CHD.	APP.
3	ITEM NO. 17 WAS 714398-K1 ITEM NO. 19 WAS 714398-K2	RFB 7-17-82		MAR 8/9/82
2	RE-ADDED ITEM NO. 20	RFB 10-13-81		MAR 10/13/81
1	ITEM #20 WAS 713064-A ITEM #19 WAS 713017-K4 ITEM #17 WAS 713017-K3 ITEM #12 WAS 177356-B ITEM #9 WAS 713100-A EPL WAS 712204-T4	RFB 4-21-81		MAR 7/21/81

UPPER TERMINAL LK-8

CUST. P. O.	NEXT ASSM. L-10861	ITEM	TYPE	PROD.	CLASS
S. O. EPL 713908-T1	BY R. Roger DATE 5-2-80	CHD. DATE 8-20-80	APP. DATE 9-3-80		

BBC BROWN BOVERI — Brown Boveri Electric, Inc. Manufacturer of I-T-E Electrical Power Equipment

C — L-11510 — REV. 3

SH. NO. 1 OF 1 — SCALE 1 TO 1

THIS DRAWING IS THE PROPERTY OF BROWN BOVERI ELECTRIC, INC. AND CONTAINS PROPRIETARY AND CONFIDENTIAL INFORMATION WHICH MUST NOT BE DUPLICATED, USED, OR DISCLOSED OTHER THAN AS EXPRESSLY AUTHORIZED BY BROWN BOVERI ELECTRIC, INC.

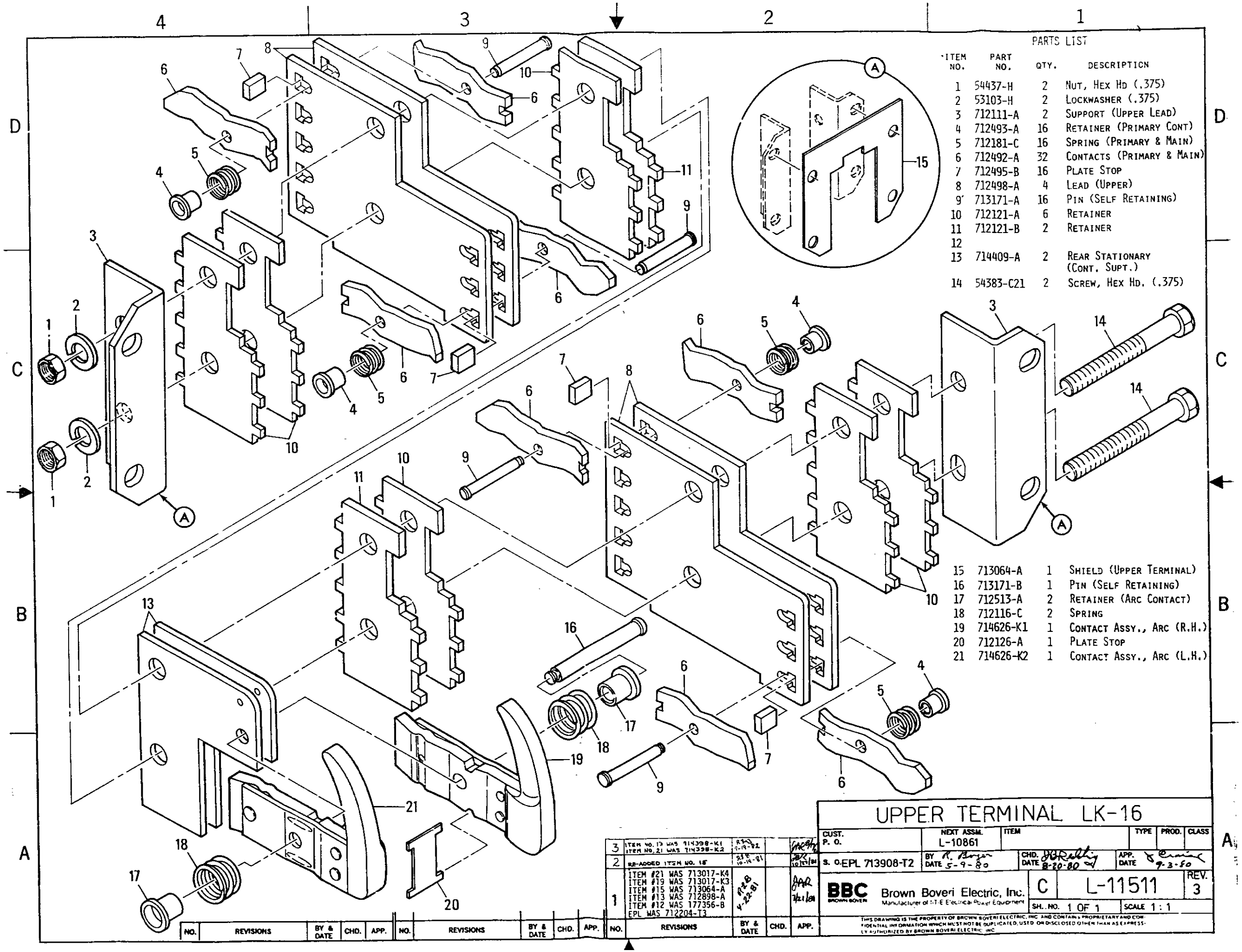

PARTS LIST

ITEM NO.	PART NO.	QTY.	DESCRIPTION
1	54437-H	2	NUT, HEX HD (.375)
2	53103-H	2	LOCKWASHER (.375)
3	712111-A	2	SUPPORT (UPPER LEAD)
4	712493-A	16	RETAINER (PRIMARY CONT)
5	712181-C	16	SPRING (PRIMARY & MAIN)
6	712492-A	32	CONTACTS (PRIMARY & MAIN)
7	712495-B	16	PLATE STOP
8	712498-A	4	LEAD (UPPER)
9	713171-A	16	PIN (SELF RETAINING)
10	712121-A	6	RETAINER
11	712121-B	2	RETAINER
12			
13	714409-A	2	REAR STATIONARY (CONT. SUPT.)
14	54383-C21	2	SCREW, HEX HD. (.375)
15	713064-A	1	SHIELD (UPPER TERMINAL)
16	713171-B	1	PIN (SELF RETAINING)
17	712513-A	2	RETAINER (ARC CONTACT)
18	712116-C	2	SPRING
19	714626-K1	1	CONTACT ASSY., ARC (R.H.)
20	712126-A	1	PLATE STOP
21	714626-K2	1	CONTACT ASSY., ARC (L.H.)

NO.	REVISIONS	BY & DATE	CHD.	APP.
3	ITEM NO. 13 WAS 714398-K1 ITEM NO. 21 WAS 714398-K2	R.B. 7-19-82		
2	RE-ADDED ITEM NO. 15	R.B.E. 10-19-81		
1	ITEM #21 WAS 713017-K4 ITEM #19 WAS 713017-K3 ITEM #15 WAS 713064-A ITEM #13 WAS 712898-A ITEM #12 WAS 177356-B EPL WAS 712204-T3	R.B. 9-22-81		

UPPER TERMINAL LK-16

CUST. P. O.	NEXT ASSM.	ITEM	TYPE	PROD.	CLASS
	L-10861				

S. O. EPL 713908-T2 | BY R. Berger DATE 5-9-80 | CHD. DATE 8-20-80 | APP. DATE 9-3-80

BBC BROWN BOVERI — Brown Boveri Electric, Inc. — Manufacturer of I-T-E Electrical Power Equipment

C | L-11511 | REV. 3 | SH. NO. 1 OF 1 | SCALE 1 : 1

THIS DRAWING IS THE PROPERTY OF BROWN BOVERI ELECTRIC, INC. AND CONTAINS PROPRIETARY AND CONFIDENTIAL INFORMATION WHICH MUST NOT BE DUPLICATED, USED OR DISCLOSED OTHER THAN AS EXPRESSLY AUTHORIZED BY BROWN BOVERI ELECTRIC, INC.

PARTS LIST

ITEM NO.	PART NO.	QTY.	DESCRIPTION
1	54383-C21	2	SCREW, HEX HD (.375 x 2.75 LG)
2	712111-A	2	SUPPORT (UPPER LEAD)
3	712121-A	4	RETAINER
4	712493-A	16	RETAINER, RD HD (PRIMARY CONTACT)
5	712181-C	16	SPRING (PRIMARY & MAIN)
6	712492-A	32	CONTACTS (PRIMARY & MAIN)
7	712495-B	16	PLATE STOP
8	712498-A	4	LEAD, UPPER
9	713171-A	16	PIN (SELF RETAINING)
10	713064-A	1	SHIELD (UPPER TERMINAL)
11			
12	714392-K2	1	CONTACT SUPPORT ASSY., ARC
13	712513-A	2	RETAINER (ARC CONTACT)
14	712116-C	2	SPRING
15	714626-K4	1	CONTACT ASSY., ARC (L.H.)
16	712126-A	1	PLATE STOP
17	714626-K3	1	CONTACT ASSY., ARC (R.H.)
18	713171-B	1	PIN (SELF RETAINING)
19	53103-H	2	LOCKWASHER (.375)
20	54437-H	2	NUT HEX HD (.375-16)

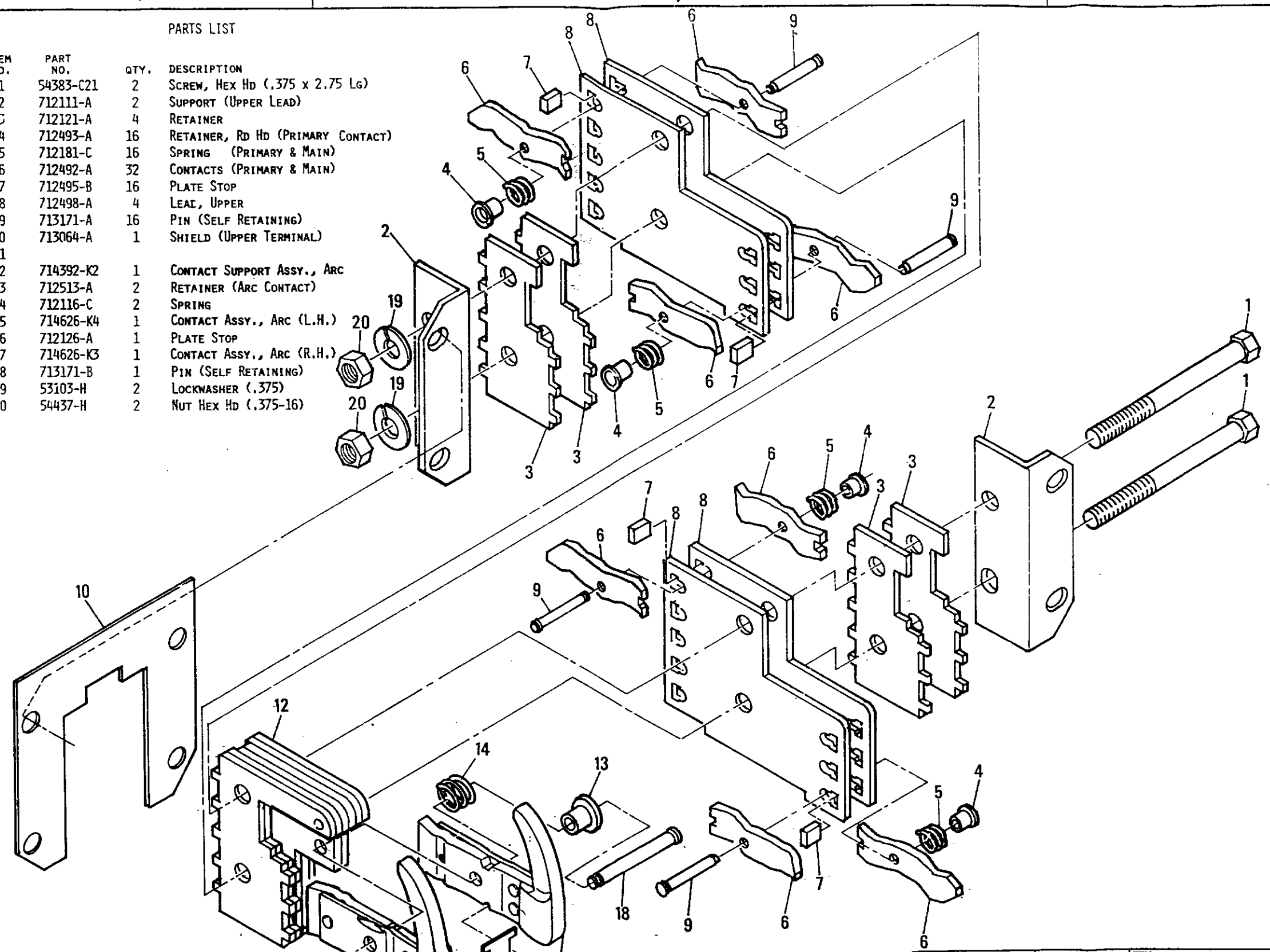

NO.	REVISIONS	BY & DATE	CHD.	APP.	NO.	REVISIONS	BY & DATE	CHD.	APP.	NO.	REVISIONS	BY & DATE	CHD.	APP.
										2	ITEM NO. 11 WAS 713386-K. ITEM NO. 15 WAS 714398-K2 ITEM NO. 12 WAS 714392-K1	RFD 7/20/82		DAR 8/11/82
										1	EPL WAS 712204 REVISED PARTS LIST. ITEM NO. 11 WAS 713386-B " " 12 " 713881-K1 " " 15 " 713017-K4 " " 17 " 713019-K3	10-15-81		DAR 11/3/81

CUST. P. O.

NEXT ASSM. L-10996

ITEM UPPER TERMINAL LK-25

TYPE | PROD. | CLASS

EPL 713908-T3

BY R. GALASSO DATE 7-3-80

CHD. DATE 8-15-80

APP. DATE 9-3-80

BBC BROWN BOVERI — Brown Boveri Electric, Inc. Manufacturer of I-T-E Electrical Power Equipment

C | L-11512 | REV 2

SH. NO. 1 OF 1 | SCALE: REDUCED

THIS DRAWING IS THE PROPERTY OF BROWN BOVERI ELECTRIC, INC. AND CONTAINS PROPRIETARY AND CONFIDENTIAL INFORMATION WHICH MUST NOT BE DUPLICATED, USED, OR DISCLOSED OTHER THAN AS EXPRESSLY AUTHORIZED BY BROWN BOVERI ELECTRIC, INC.

PARTS LIST

ITEM NO.	PART NO.	QTY.	
1	54383-C10	4	Screw, Hex Hd (.375 x 2.50 Lg)
2	712111-A	2	Support (Upper Lead)
3	712121-A	8	Retainer
4	712493-A	32	Retainer, Rd Hd (Primary Contact)
5	712181-C	32	Spring (Primary & Main)
6	712492-A	64	Contacts (Primary & Main)
7	712495-B	32	Plate Stop
8	712498-A	8	Lead, Upper
9	713171-A	32	Pin (Self Retaining)
10	713064-A	2	Shield (Upper Terminal)
11			
12	714392-K2	2	Contact support assy., Arc
13	712513-A	4	Retainer (Arc Contact)
14	712116-C	4	Spring
15	714626-K4	2	Contact assy., Arc (L.H.)
16	712126-A	2	Plate Stop
17	714626-K3	2	Contact assy., Arc (R.H.)
18	713171-B	2	Pin (Self Retaining)
19	713381-A	1	Block (Heat Sink)
20	53103-H	4	Lockwasher (.375)

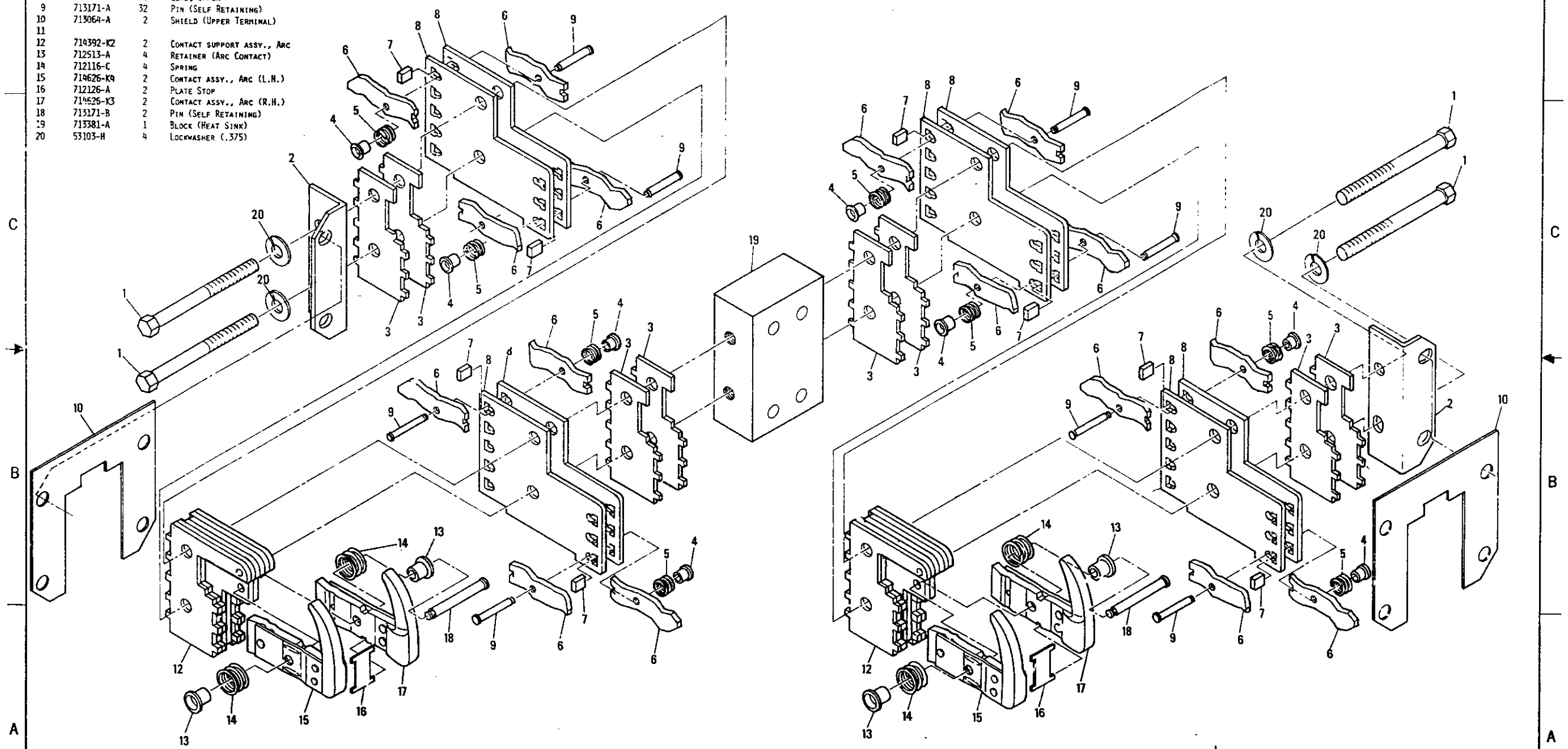

NO.	REVISIONS	BY & DATE	CHD.	APP.	NO.	REVISIONS	BY & DATE	CHD.	APP.	NO.	REVISIONS	BY & DATE	CHD.	APP.
2	ITEM NO. 15 WAS 714392-K1 " " 16 " 712513-A " " 17 " 712121-A													
1	DELETED ITEM NO. 6 AND REVISED PARTS LIST. ITEM NO. 11 WAS 713171-B " " 16 " 712126-A " " 17 " 714626-K4 " " 18 " 713171-B													

CUST. P. O.	NEXT ASSBL. L-10996	ITEM UPPER TERMINAL LK 32-42	TYPE	PROD.	CLASS
EPL 713908-T4	BY R. GALLASSO DATE 7-3-80	CHD. DATE 8-13-80	APP. DATE 9-3-80		

BBC Brown Boveri Electric, Inc.

D L-11513 REV. 2

SHT. NO. 1 OF 1 SCALE: REDUCED

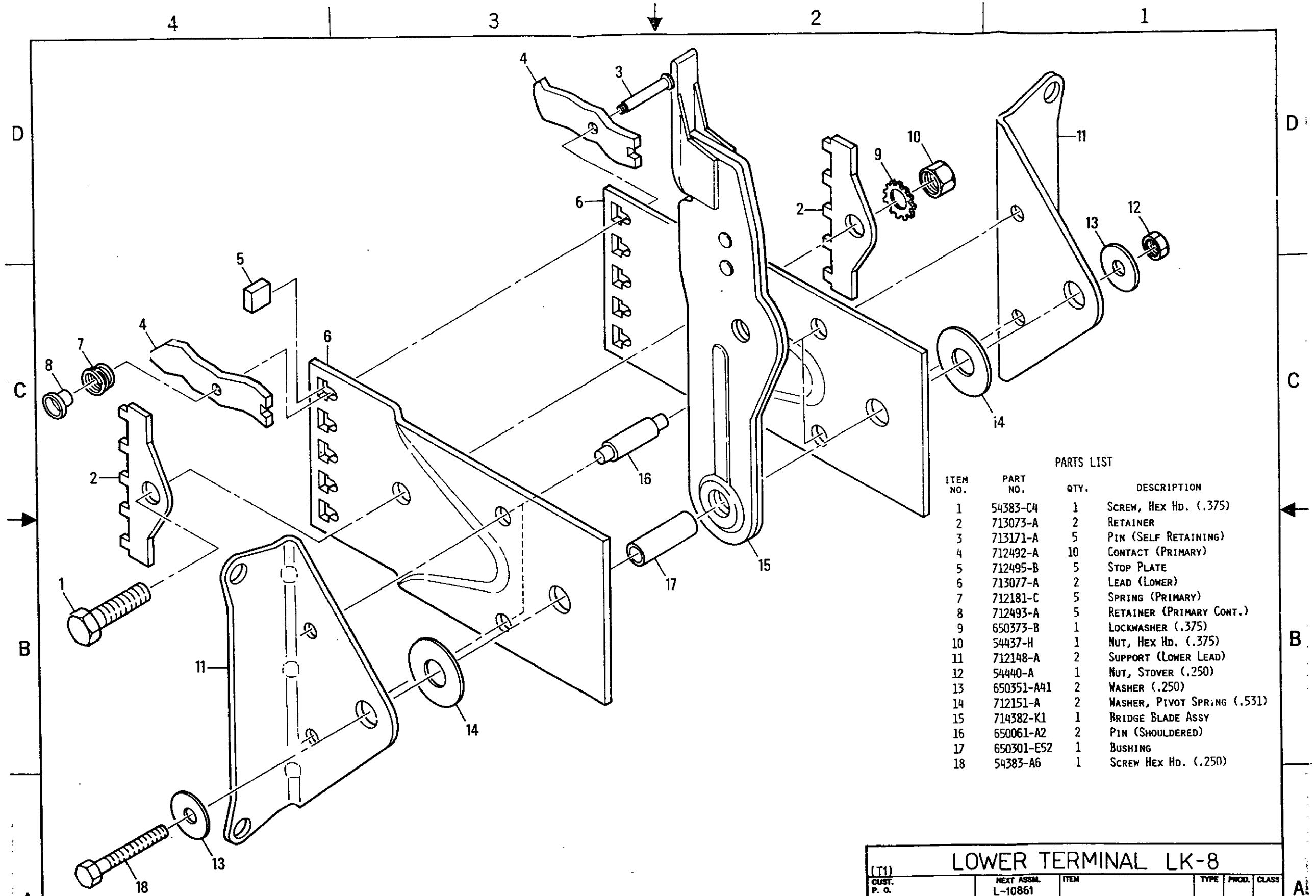

PARTS LIST

ITEM NO.	PART NO.	QTY.	DESCRIPTION
1	54383-C4	1	SCREW, HEX HD. (.375)
2	713073-A	2	RETAINER
3	713171-A	5	PIN (SELF RETAINING)
4	712492-A	10	CONTACT (PRIMARY)
5	712495-B	5	STOP PLATE
6	713077-A	2	LEAD (LOWER)
7	712181-C	5	SPRING (PRIMARY)
8	712493-A	5	RETAINER (PRIMARY CONT.)
9	650373-B	1	LOCKWASHER (.375)
10	54437-H	1	NUT, HEX HD. (.375)
11	712148-A	2	SUPPORT (LOWER LEAD)
12	54440-A	1	NUT, STOVER (.250)
13	650351-A41	2	WASHER (.250)
14	712151-A	2	WASHER, PIVOT SPRING (.531)
15	714382-K1	1	BRIDGE BLADE ASSY
16	650061-A2	2	PIN (SHOULDERED)
17	650301-E52	1	BUSHING
18	54383-A6	1	SCREW HEX HD. (.250)

(T1) LOWER TERMINAL LK-8

CUST. P. O.	NEXT ASSM. L-10861	ITEM	TYPE	PROD.	CLASS
S. O. EPL 713907-T1	BY R. Boyer DATE 5-20-80	CHD. DATE 9-20-80	APP. DATE 9-3-80		

BBC BROWN BOVERI — Brown Boveri Electric, Inc. Manufacturer of I-T-E Electrical Power Equipment

C L-11514 REV. 2

SH. NO. 1 OF 1 SCALE 1:1

THIS DRAWING IS THE PROPERTY OF BROWN-BOVERI ELECTRIC, INC. AND CONTAINS PROPRIETARY AND CONFIDENTIAL INFORMATION WHICH MUST NOT BE DUPLICATED, USED, OR DISCLOSED OTHER THAN AS EXPRESSLY AUTHORIZED BY BROWN BOVERI ELECTRIC, INC.

NO.	REVISIONS	BY & DATE	CHD.	APP.
2	ADDED QTY. + DESCRIPTION	RJB 7-31-81		
1	ITEM #15 WAS 712318-K1; EPL WAS 712205-T1	RJB 4-6-81	DAR 7/21/81	

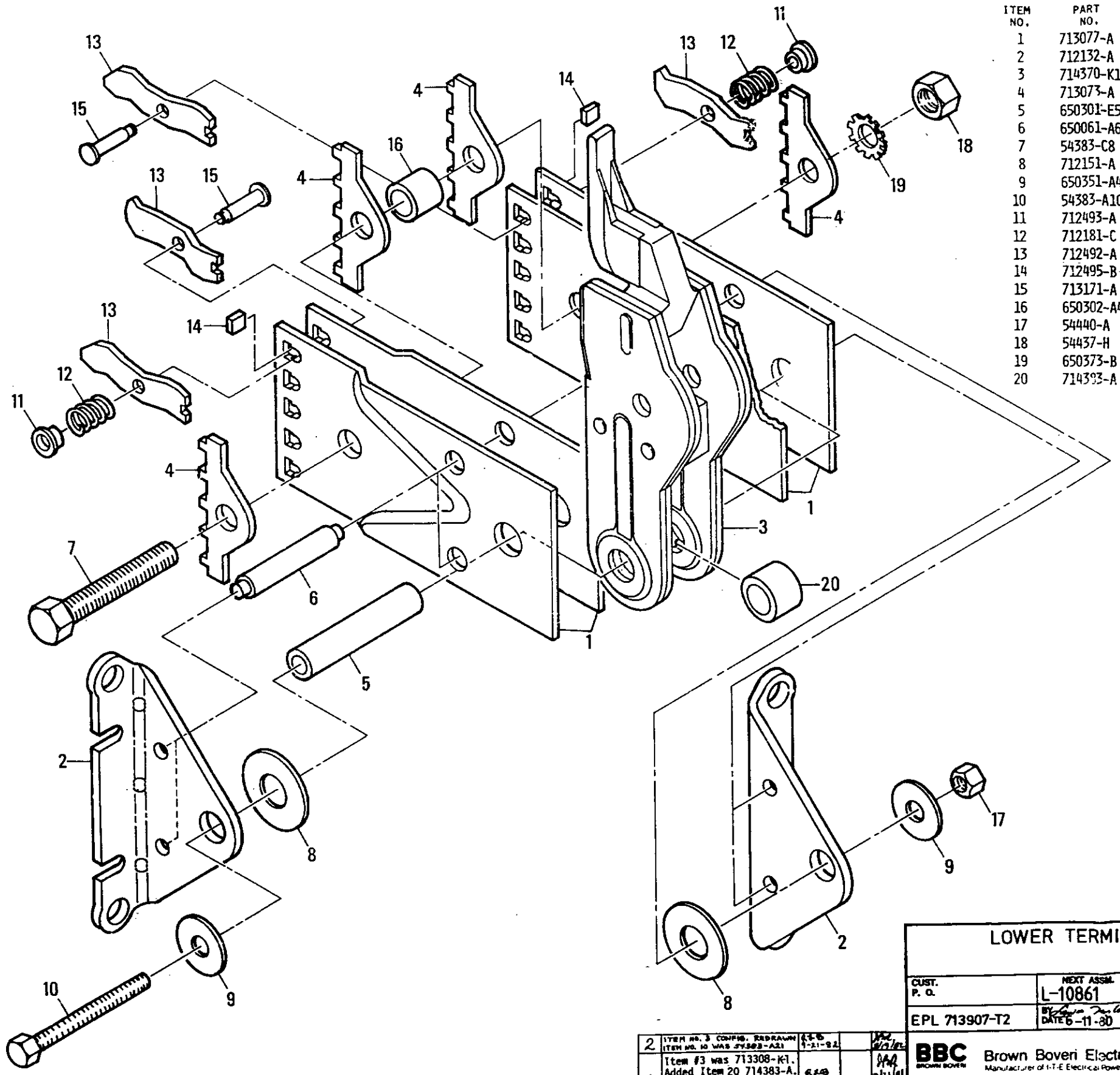

PARTS LIST

ITEM NO.	PART NO.	QTY.	DESCRIPTION
1	713077-A	4	LEAD (LOWER)
2	712132-A	2	SUPPORT (LOWER LEAD)
3	714370-K1	1	BRIDGE BLADE ASSY
4	713073-A	4	RETAINER
5	650301-E54	1	BUSHING
6	650061-A6	2	PIN (SHOULDERED)
7	54383-C8	1	SCREW, HEX HD. (.375)
8	712151-A	2	WASHER, PIVOT SPRING (.531)
9	650351-A41	2	WASHER (.250)
10	54383-A10	1	SCREW, HEX HD. (.250)
11	712493-A	10	RETAINER (PRIMARY CONT.)
12	712181-C	10	SPRING (PRIMARY)
13	712492-A	20	CONTACTS (PRIMARY)
14	712495-B	10	STOP PLATE
15	713171-A	10	PIN (SELF RETAINING)
16	650302-A47	1	SPACER
17	54440-A	1	NUT, STOVER (.250)
18	54437-H	1	NUT, HEX HD (.375)
19	650373-B	1	LOCKWASHER (.375)
20	714393-A	1	SPACER

LOWER TERMINAL ASSEMBLY LK-16

CUST. P. O.	NEXT ASSM.	ITEM	TYPE	PROD.	CLASS
EPL 713907-T2	L-10861				
	BY DATE 6-11-80	CHD. DATE 8-20-80	APP. DATE 9-3-80		

BBC BROWN BOVERI — Brown Boveri Electric, Inc. Manufacturer of I-T-E Electrical Power Equipment

C L-11515 REV. 2

SH. NO. 1 of 1 SCALE —

THIS DRAWING IS THE PROPERTY OF BROWN-BOVERI ELECTRIC, INC. AND CONTAINS PROPRIETARY AND CONFIDENTIAL INFORMATION WHICH MUST NOT BE DUPLICATED, USED, OR DISCLOSED OTHER THAN AS EXPRESSLY AUTHORIZED BY BROWN-BOVERI ELECTRIC, INC.

NO.	REVISIONS	BY & DATE	CHD.	APP.
2	ITEM NO. 3 CONFIG. REDRAWN ITEM NO. 10 WAS 3V383-A21	9-21-82		
1	Item #3 was 713308-K1. Added Item 20 714383-A. EPL was 712205-T3.	9-6-81		

PARTS LIST

ITEM NO.	PART NO.	QTY.	DESCRIPTION
1	54383-A21	1	SCREW, HEX HD (.250)
2	650351-A41	2	WASHER (.250)
3	712132-A	2	SUPPORT (LOWER LEAD)
4	712151-A	2	WASHER
5	650061-A1	2	PIN, SHOULDERED
6	650301-E51	1	BUSHING
7	713076-A	2	LEAD, LOWER
8	713077-A	4	LEAD, LOWER
9	714370-K2	1	BRIDGE BLADE ASSY.
10	712492-A	20	CONTACT (PRIMARY)
11	713073-A	4	RETAINER
12	712181-C	10	SPRING (PRIMARY)
13	712493-A	10	RETAINER (PRIMARY CONTACT)
14	650373-B	1	LOCKWASHER (.375)
15	54437-H	1	NUT, HEX HD (.375-16)
16	712495-B	10	STOP PLATE
17	650302-A47	1	SPACER
18	713171-A	10	PIN (SELF RETAINING)
19	650354-A7	2	WASHER
20	54440-A	1	NUT, STOVER (.250-20)
21	54383-C10	1	SCREW, HEX HD (.375)
22	714383-A	1	SPACER

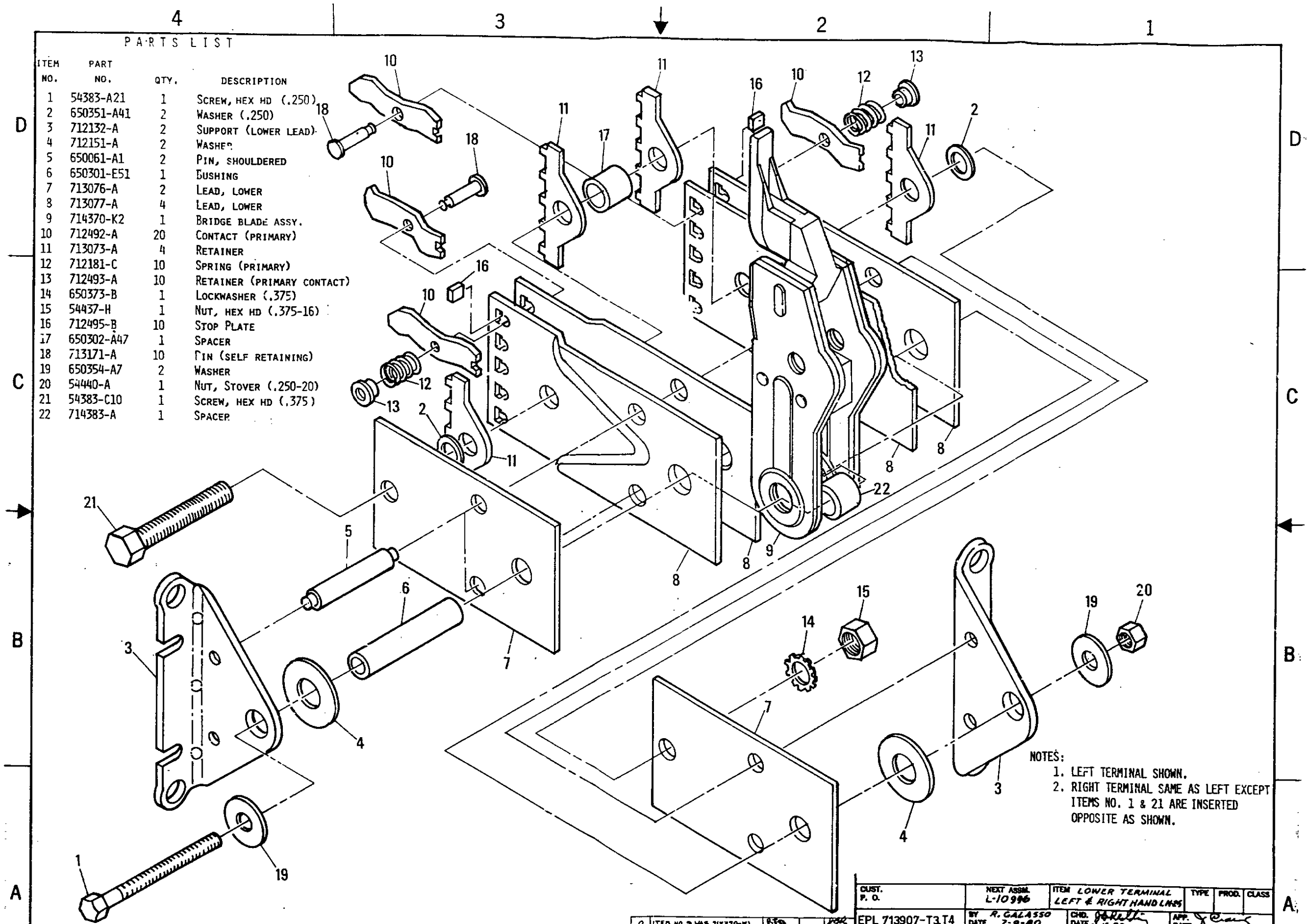

NOTES:
1. LEFT TERMINAL SHOWN.
2. RIGHT TERMINAL SAME AS LEFT EXCEPT ITEMS NO. 1 & 21 ARE INSERTED OPPOSITE AS SHOWN.

NO.	REVISIONS	BY & DATE	CHD.	APP.
2	ITEM NO. 9 WAS 714370-K1 ITEM NO. 1 WAS 54383-A11	R.E.G. 9-22-82		9/24/82
1	REVISED DWG. & P/L. EPL WAS 712205. ITEM 9 WAS 713808-K1	10/1/81		10/12/81

CUST. P. O.	NEXT ASSM.	ITEM	TYPE	PROD.	CLASS
	L-10996	LOWER TERMINAL LEFT & RIGHT HAND LINES			

EPL 713907-T3,T4 | BY R. GALASSO DATE 7-9-80 | CHD. DATE 8-15-80 | APP. DATE 9-3-80

BBC BROWN BOVERI — Brown Boveri Electric, Inc. Manufacturer of I-T-E Electrical Power Equipment

C | L-11516 | REV. 2 | SH. NO. 1 OF 1 | SCALE —

THIS DRAWING IS THE PROPERTY OF BROWN-BOVERI ELECTRIC, INC. AND CONTAINS PROPRIETARY AND CONFIDENTIAL INFORMATION WHICH MUST NOT BE DUPLICATED, USED, OR DISCLOSED OTHER THAN AS EXPRESSLY AUTHORIZED BY BROWN BOVERI ELECTRIC, INC.

NOTES:

1. LOWER TERMINALS SHOWN ARE FOR LK-42. FOR LK-32 DELETE ITEMS NO. 21.

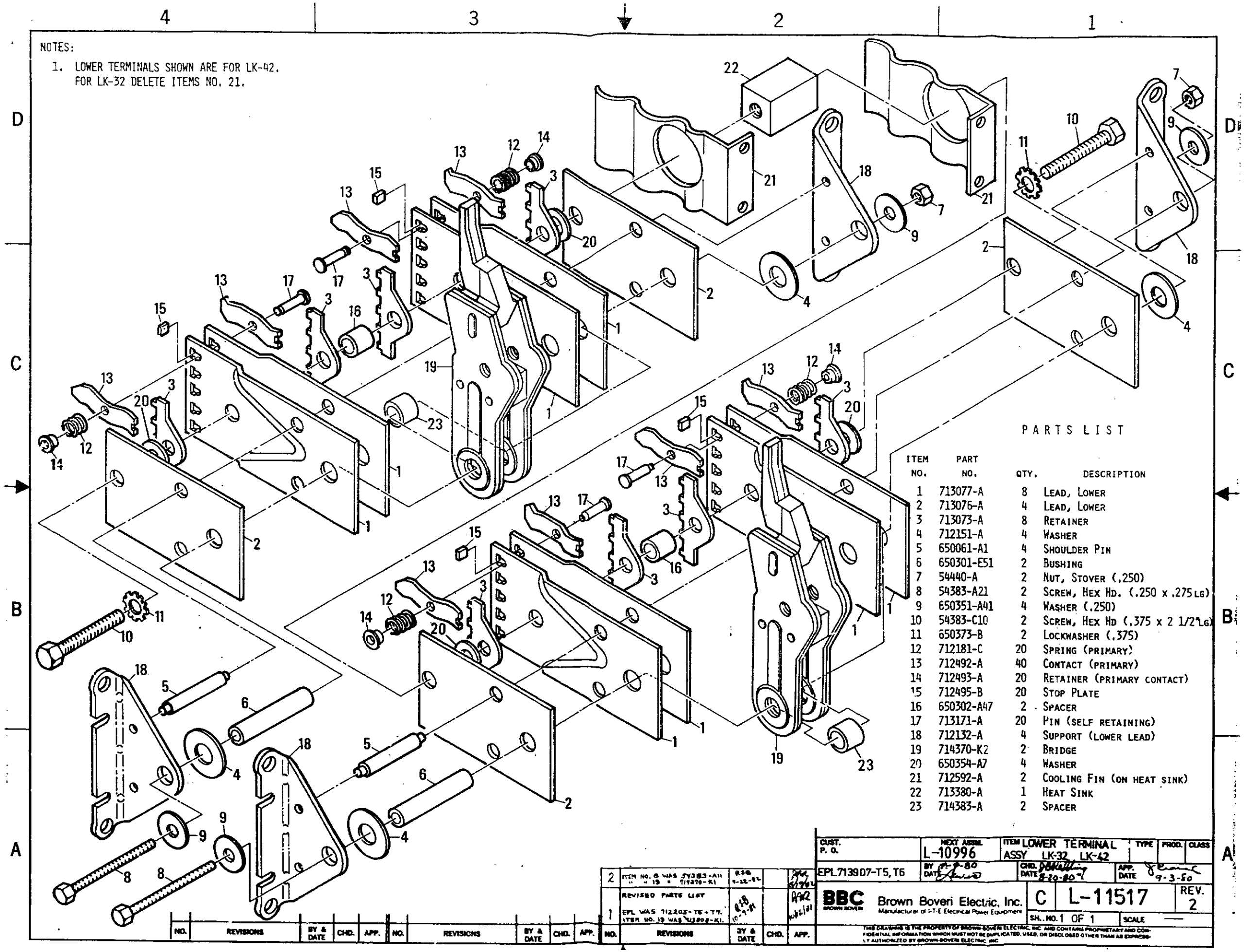

PARTS LIST

ITEM NO.	PART NO.	QTY.	DESCRIPTION
1	713077-A	8	LEAD, LOWER
2	713076-A	4	LEAD, LOWER
3	713073-A	8	RETAINER
4	712151-A	4	WASHER
5	650061-A1	4	SHOULDER PIN
6	650301-E51	2	BUSHING
7	54440-A	2	NUT, STOVER (.250)
8	54383-A21	2	SCREW, HEX HD. (.250 x .275 LG)
9	650351-A41	4	WASHER (.250)
10	54383-C10	2	SCREW, HEX HD (.375 x 2 1/2 LG)
11	650373-B	2	LOCKWASHER (.375)
12	712181-C	20	SPRING (PRIMARY)
13	712492-A	40	CONTACT (PRIMARY)
14	712493-A	20	RETAINER (PRIMARY CONTACT)
15	712495-B	20	STOP PLATE
16	650302-A47	2	SPACER
17	713171-A	20	PIN (SELF RETAINING)
18	712132-A	4	SUPPORT (LOWER LEAD)
19	714370-K2	2	BRIDGE
20	650354-A7	4	WASHER
21	712592-A	2	COOLING FIN (ON HEAT SINK)
22	713380-A	1	HEAT SINK
23	714383-A	2	SPACER

NO.	REVISIONS	BY & DATE	CHD.	APP.
2	ITEM NO. 8 WAS 54383-A11 " " 19 " 714370-K1	RFG 9-12-82		
1	REVISED PARTS LIST. EPL WAS 712203-T6 + T7. ITEM NO. 19 WAS 714370-K1.	RFG 10-9-81	DAR 10/21/81	

CUST. P. O.	NEXT ASSM. L-10996	ITEM LOWER TERMINAL ASSY LK-32, LK-42	TYPE / PROD. / CLASS
EPL 713907-T5, T6	BY 9-3-80 DATE	CHD. DATE 8-20-80	APP. DATE 9-3-80

BBC BROWN BOVERI — Brown Boveri Electric, Inc. Manufacturer of I-T-E Electrical Power Equipment

C L-11517 REV. 2

SH. NO. 1 OF 1 SCALE —

THIS DRAWING IS THE PROPERTY OF BROWN BOVERI ELECTRIC, INC. AND CONTAINS PROPRIETARY AND CONFIDENTIAL INFORMATION WHICH MUST NOT BE DUPLICATED, USED, OR DISCLOSED OTHER THAN AS EXPRESSLY AUTHORIZED BY BROWN BOVERI ELECTRIC, INC.

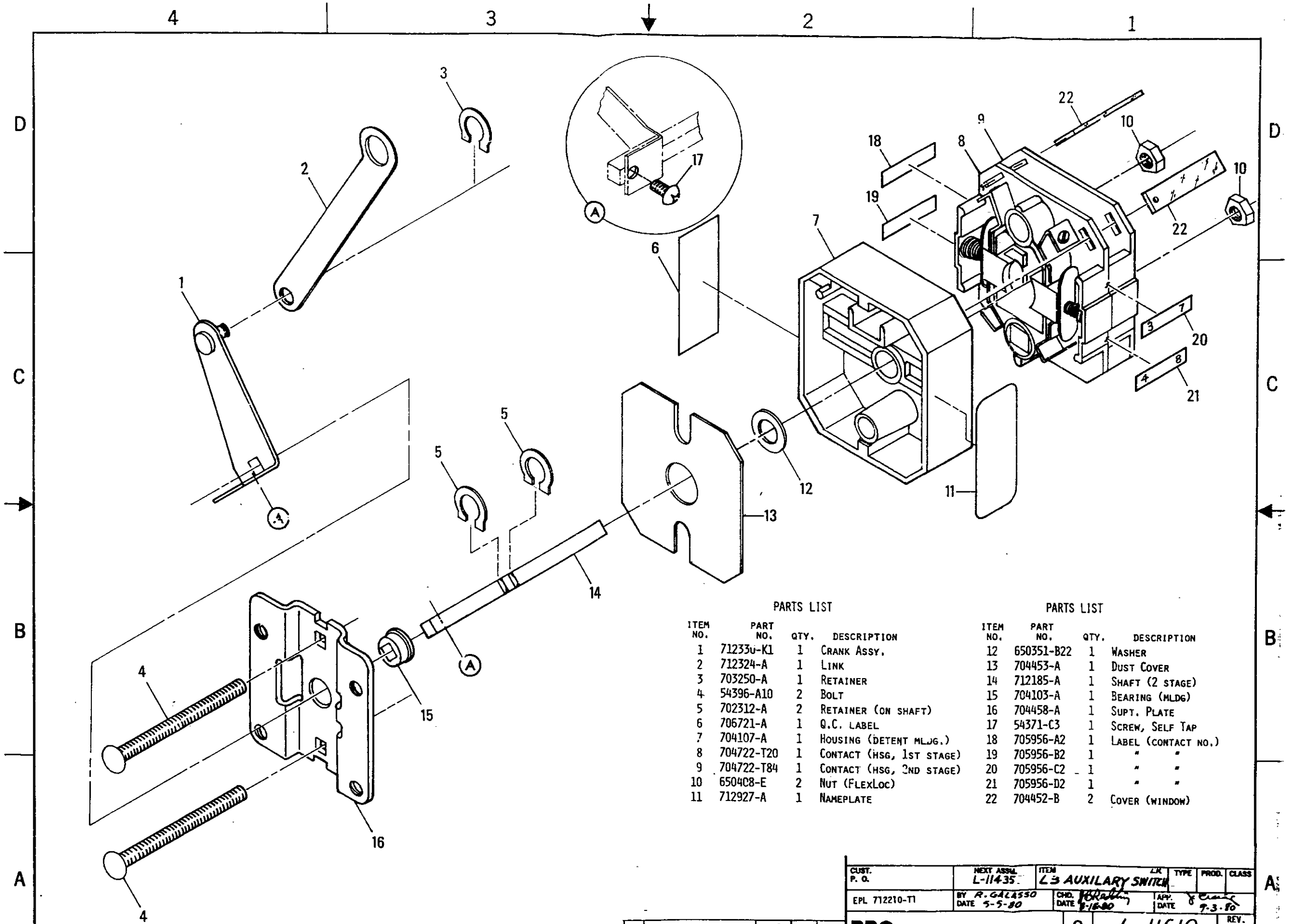

PARTS LIST

ITEM NO.	PART NO.	QTY.	DESCRIPTION
1	712330-K1	1	CRANK ASSY.
2	712324-A	1	LINK
3	703250-A	1	RETAINER
4	54396-A10	2	BOLT
5	702312-A	2	RETAINER (ON SHAFT)
6	706721-A	1	Q.C. LABEL
7	704107-A	1	HOUSING (DETENT MLDG.)
8	704722-T20	1	CONTACT (HSG, 1ST STAGE)
9	704722-T84	1	CONTACT (HSG, 2ND STAGE)
10	650408-E	2	NUT (FLEXLOC)
11	712927-A	1	NAMEPLATE

PARTS LIST

ITEM NO.	PART NO.	QTY.	DESCRIPTION
12	650351-B22	1	WASHER
13	704453-A	1	DUST COVER
14	712185-A	1	SHAFT (2 STAGE)
15	704103-A	1	BEARING (MLDG)
16	704458-A	1	SUPT. PLATE
17	54371-C3	1	SCREW, SELF TAP
18	705956-A2	1	LABEL (CONTACT NO.)
19	705956-B2	1	" "
20	705956-C2	1	" "
21	705956-D2	1	" "
22	704452-B	2	COVER (WINDOW)

NO.	REVISIONS	BY & DATE	CHD.	APP.	NO.	REVISIONS	BY & DATE	CHD.	APP.	NO.	REVISIONS	BY & DATE	CHD.	APP.
										1	ADDED ITEM NOS. 18, 19, 20, 21, 22			

CUST. P. O.	NEXT ASSY. L-11435	ITEM L3 AUXILARY SWITCH		TYPE	PROD. CLASS
EPL 712210-T1	BY R. GALASSO DATE 5-5-80	CHD. DATE 5-16-80	APP. DATE 9-3-80		

BBC BROWN BOVERI — Brown Boveri Electric, Inc. Manufacturer of I-T-E Electrical Power Equipment

C L-11519 REV. 1

SH. NO. 1 of 1 SCALE

THIS DRAWING IS THE PROPERTY OF BROWN BOVERI ELECTRIC, INC. AND CONTAINS PROPRIETARY AND CONFIDENTIAL INFORMATION WHICH MUST NOT BE DUPLICATED, USED, OR DISCLOSED OTHER THAN AS EXPRESSLY AUTHORIZED BY BROWN BOVERI ELECTRIC, INC.

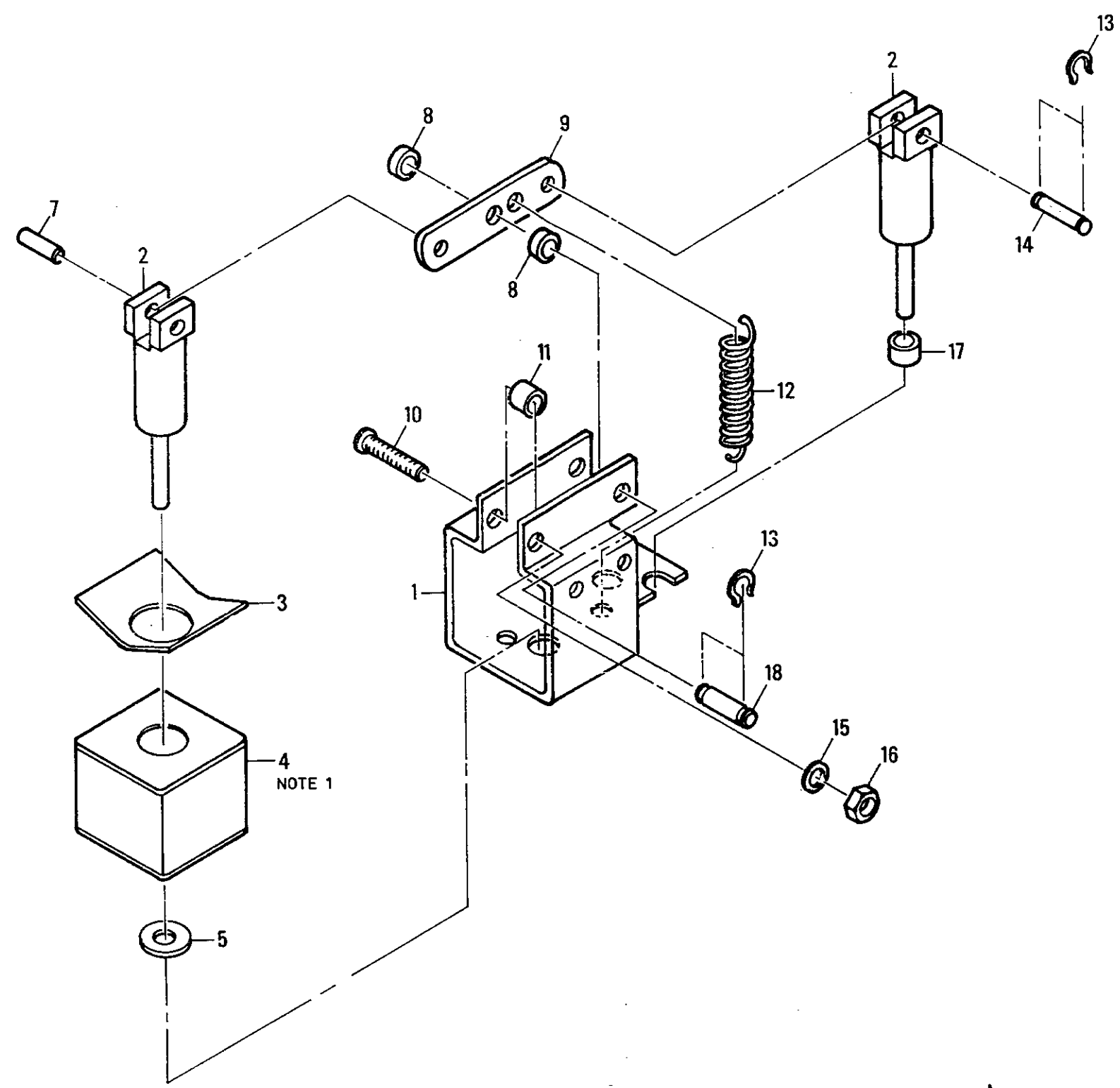

PARTS LIST

ITEM NO.	PART NO.	QTY.	DESCRIPTION.
1	713837-K1	1	FRAME ASSY
2	712432-K1	2	PLUNGER ASSY.
3	712427-A	1	RETAINER, COIL
4	712438-XX	1	COIL
5	650352-A42	1	WASHER
6			
7	640030-B	1.	PIN
8	650301-E46	2	BUSHING
9	712429-A	1	LINK
10	54343-D10	1	SCREW, RD. HD. (#10-32)
11	650301-E47	1	BUSHING
12	50402-B40	1	SPRING, EXT.
13	703156-A	2	RETAINER
14	650051	1	PIN
15	53103-E	1	LOCKWASHER (#10)
16	54400-D	1	NUT, HEX (#10-32)
17	713109-A	1	BUSHING
18	650051-A24	1	PIN

NOTES:

1. ITEM No. 4 (COILS). USE PER EPL 712214 (T1, T3, T6, T7, T8, T9, & T12)

NO.	REVISIONS	BY & DATE	CHD.	APP.
1	ITEM 10 was 54373-D10 ITEM 17 was 712432-K1 ADDED NOTE 1 ITEM No. 6 DELETED	6-3-81	7-20-81	7-20-81

CUST. P. O.: EPL 712214-T10

NEXT ASSM.: L-11303

ITEM: SHUNT TRIP LK

TYPE | PROD. | CLASS

BY DATE 5-16-80 | CHD. DATE 8-10-80 | APP. DATE 9-3-80

BBC BROWN BOVERI — Brown Boveri Electric, Inc. Manufacturer of I-T-E Electrical Power Equipment

C | L-11520 | REV. 1

SHL. NO. 1 | SCALE 1:1

THIS DRAWING IS THE PROPERTY OF BROWN-BOVERI ELECTRIC, INC. AND CONTAINS PROPRIETARY AND CONFIDENTIAL INFORMATION WHICH MUST NOT BE DUPLICATED, USED, OR DISCLOSED OTHER THAN AS EXPRESSLY AUTHORIZED BY BROWN-BOVERI ELECTRIC, INC.

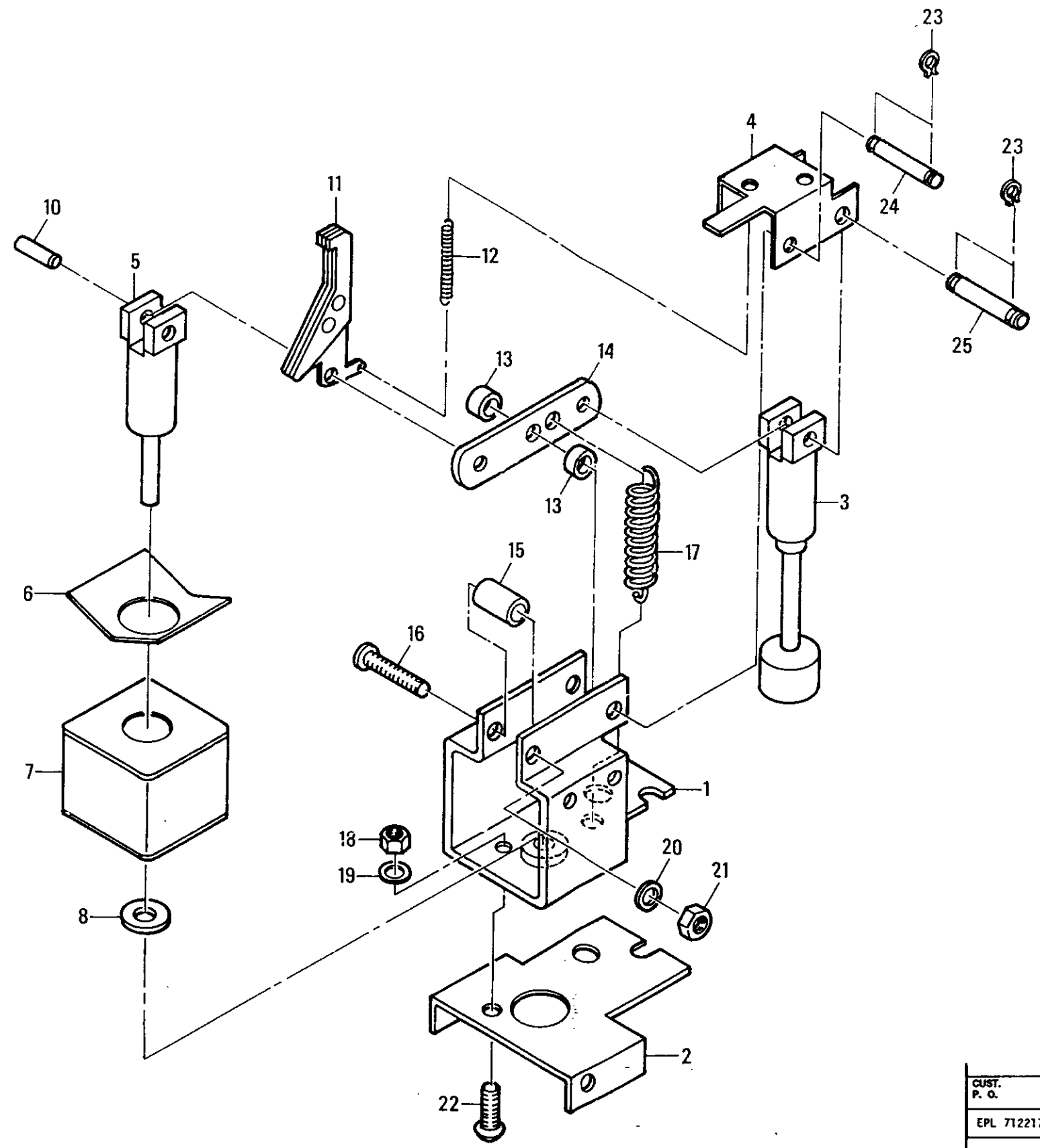

PARTS LIST

ITEM NO.	PART NO.	QTY.	DESCRIPTION
1	713837-K1	1	FRAME ASSY.
2	713093-A	1	SUPPORT
3	712432-K3	1	PLUNGER ASSY.
4	713106-A	1	SUPPORT, SPRING
5	712432-K1	1	PLUNGER ASSY.
6	712427-A	1	RETAINER, COIL
7	712438-XX	1	COIL
8	650352-A42	1	WASHER
9			
10	650030-B	1	PIN
11	713838-K1	1	HOOK ASSY.
12	713320-A	1	SPRING, EXT.
13	650301-E46	2	BUSHING
14	712429-A	1	LINK
15	650301-E47	1	BUSHING
16	54343-D10	1	SCREW, RD. HD. (#10-32 x 1")
17	50402-B40	1	SPRING, EXT.
18	54400-F	1	NUT, HEX (.250)
19	53103-F	1	LOCKWASHER (.250)
20	53103-C	1	LOCKWASHER (#10)
21	54400-D	1	NUT, HEX (#10-32)
22	54343-F6	1	SCREW, RD. HD. (.250 x .50 LG.)
23	703156-A	4	RETAINER
24	650051-A24	1	PIN
25	650051-A23	1	PIN

NOTES:
1. USE ITEMS NO. 6 & 7 AS PER EPL 712217-T1, T3, T6, T7, T8, T9 & T12.

NO.	REVISIONS	BY & DATE	CHD.	APP.
1	Item No. 9 deleted (was 713834-A)			

CUST. P. O.	NEXT ASSM.	ITEM	TYPE	PROD.	CLASS
	L-11335	CLOSE COIL			
EPL 712217-T10	BY DATE 5-27-80	CHD. DATE 8-20-80	APP. DATE 9-3-80		

BBC BROWN BOVERI — Brown Boveri Electric, Inc. — Manufacturer of L-T E Electrical Power Equipment

C L-11522 REV. 1

SH. NO. 1 of 1 SCALE —

THIS DRAWING IS THE PROPERTY OF BROWN BOVERI ELECTRIC INC AND CONTAINS PROPRIETARY AND CONFIDENTIAL INFORMATION WHICH MUST NOT BE DUPLICATED USED, OR DISCLOSED OTHER THAN AS EXPRESSLY AUTHORIZED BY BROWN BOVERI ELECTRIC INC

NOTE: See sheet 2 ("B" size) for Parts List

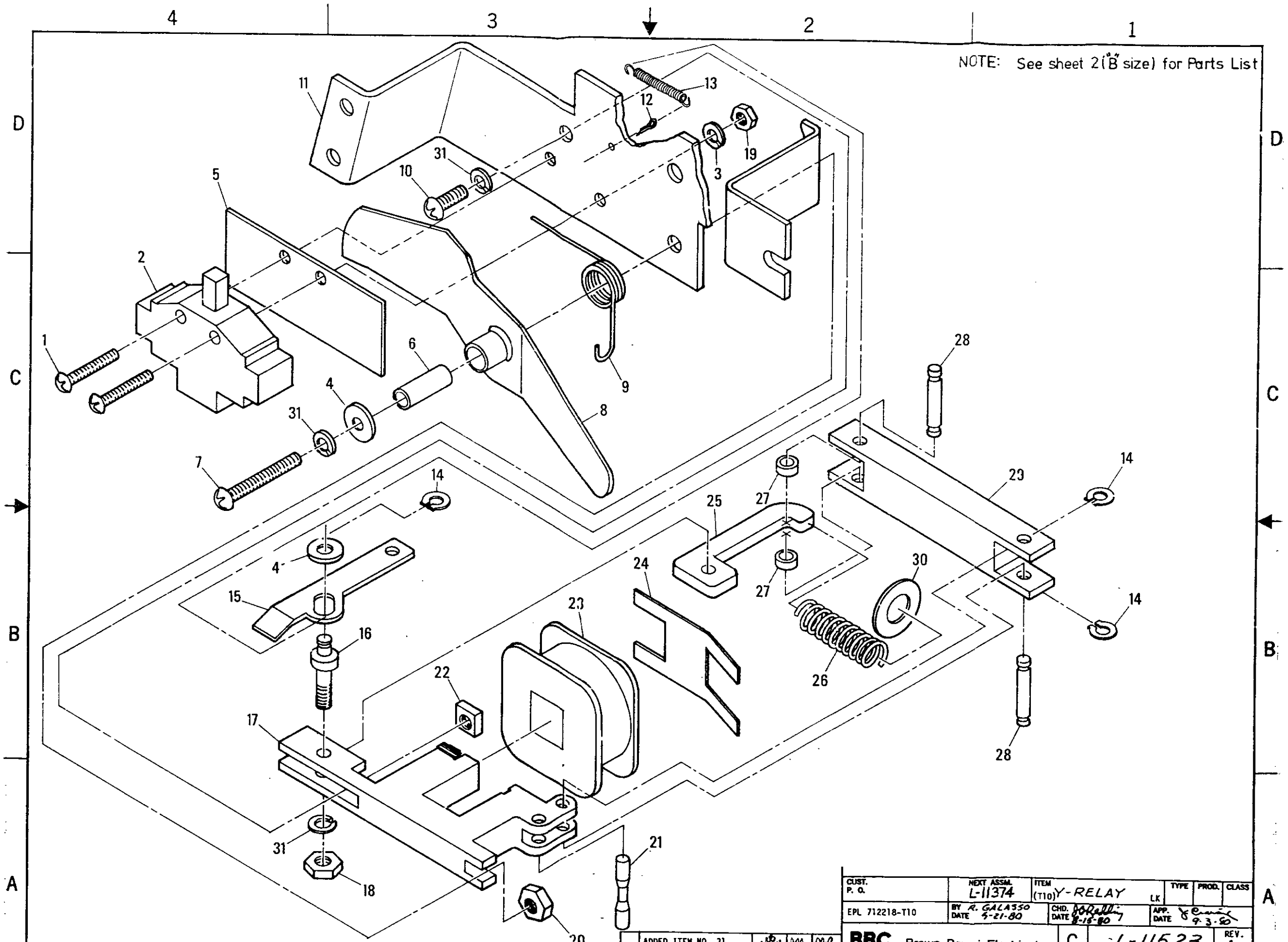

CUST. P. O.	NEXT ASSM.	ITEM	TYPE	PROD.	CLASS
	L-11374	(T10) Y-RELAY LK			
EPL 712218-T10	BY R. GALASSO DATE 5-21-80	CHD. DATE 8-18-80	APP. DATE 9-3-80		

BBC BROWN BOVERI — Brown Boveri Electric, Inc. Manufacturers of I-T-E Electrical Power Equipment

C L-11523 REV. 1

SH. NO. 1 of 2 SCALE

THIS DRAWING IS THE PROPERTY OF BROWN BOVERI ELECTRIC, INC. AND CONTAINS PROPRIETARY AND CONFIDENTIAL INFORMATION WHICH MUST NOT BE DUPLICATED, USED, OR DISCLOSED OTHER THAN AS EXPRESSLY AUTHORIZED BY BROWN BOVERI ELECTRIC, INC.

NO.	REVISIONS	BY & DATE	CHD.	APP.
1	ADDED ITEM NO. 31 ADDED NOTE 1	R.G. 6-25-81		

SHEET 2 of 2 (B size)

K&E 18 1153 10-81 MC2889

"Y" RELAY

(T10) LK

BBC BROWN BOVERI — Brown Boveri Electric, Inc.
Manufacturer of I-T-E Electrical Power Equipment

L-11523 — SHEET NO. 2 OF 2 — CONT. ON — REV. 1

NEXT ASSY. L-11374	BY R. Boyer	CKD.	APP.	MICRO.
S. O.	DATE 6-25-81	DATE 6-25-81	DATE 6-25-81	
EPL 712218-T10				

THIS DRAWING IS THE PROPERTY OF BROWN-BOVERI ELECTRIC, INC. AND CONTAINS PROPRIETARY AND CONFIDENTIAL INFORMATION WHICH MUST NOT BE DUPLICATED, USED, OR DISCLOSED OTHER THAN AS EXPRESSLY AUTHORIZED BY BROWN-BOVERI ELECTRIC, INC.

STANDARD TOLERANCE INFO. ON DR. 52016
TOLERANCES — UNLESS OTHERWISE SPECIFIED — 3 PL. DEC. ±

DIMENSIONS ARE IN INCHES
2 PL. DEC. ±

PARTS LIST

ITEM NO.	PART NO.	QTY.	DESCRIPTION
1	54343-C10	2	SCREW, RD. HD. (#8-32 X 1")
2	706378-T1	1	SWITCH (N.O.)
3	53103-D	2	LOCKWASHER
4	54500-D	2	FLAT WASHER
5	707678-A	1	SHEET, INSUL.
6	640301-E59	1	BUSHING
7	54343-D13	1	SCREW, RD. HD. (#10-32 X 1.50 LG)
8	713391-K1	1	CRANK ASSY.
9	712161-B	1	SPRING, TORSION
10	54343-D7	1	SCREW, RD. HD. (#10-32 X .62 LG)
11	713388-A	1	PLATE, MOUNTING
12	53113-B1	1	COTTER PIN
13	712170-C	1	SPRING, EXT.
14	703156-A	5	RETAINER
15	713390-A	1	LINK, TRIP
16	712377-A	1	PIN (SHOULDERED)
17	713385-K1	1	MAGNET ASSY.
18	54400-D	1	NUT
19	54400-C	2	NUT
20	50369-F	1	NUT, FLEXLOC (#10-32)
21	650056-B	1	PIN
22	50374-E	1	NUT, SQUARE (#10-32)
23	713393-XX	1	COIL
24	713389-A	1	RETAINER, COIL

PARTS LIST

ITEM NO.	PART NO.	QTY.	DESCRIPTION
25	713439-A	1	LINK
26	712181-B	1	SPRING, COMP.
27	650301-B80	2	BUSHING
28	650051-A25	2	PIN
29	713387-K1	1	ARMATURE ASSY.
30	650351-A62	1	FLAT WASHER
31	53103-E	3	LOCKWASHER

NOTES:

1. USE ITEM NO. 23 (COILS) PER EPL 712218-T1, T3, T6, T7 & T8.

REVISIONS
1 ADDED ITEM 31 - NOTE 1 — 6-25-81

WC3778

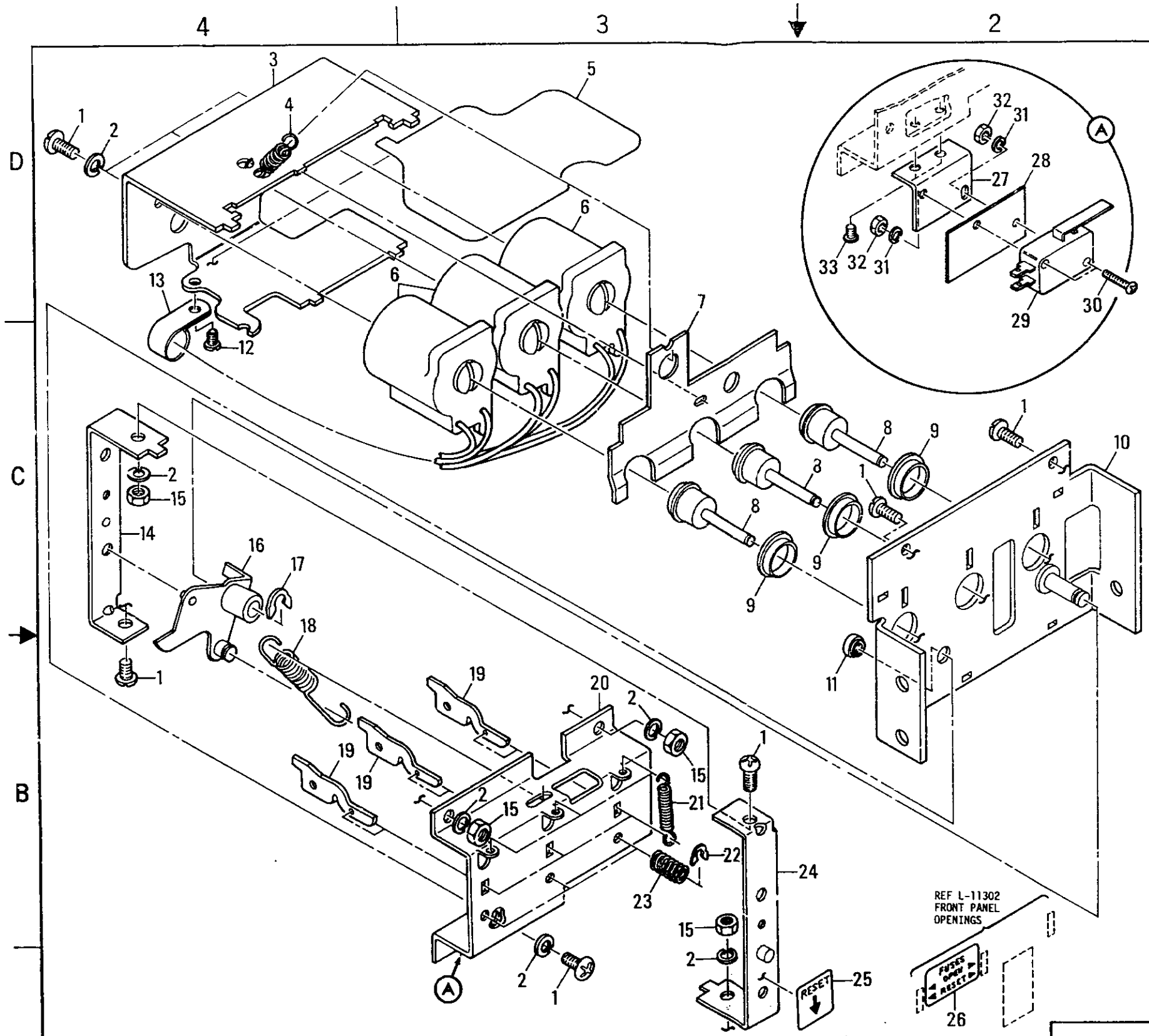

PARTS LIST

ITEM NO.	PART NO.	QTY.	DESCRIPTION
1	54343-D4	8	SCREW, RD HD (#10-32 x .38 LG)
2	53103-E	8	LOCKWASHER (#10)
3	708868-A	1	FRAME, MAGNET
4	650216-A1	1	SPRING
5	708866-A	1	INSULATION
6	713049-K1	3	COIL ENCAP
7	713120-A	1	ARMATURE
8	713125-A	3	PLUNGER
9	177492-H	3	EYELET (BRASS)
10	713034-K1	1	PLATE SUPPORT
11	146941-E	1	INSERT (#10-32)
12	50338-A11	1	SCREW, SELF TAP (#8-32)
13	650441-G	1	CLAMP, CABLE (NYLON)
14	713036-K1	1	TARGET, SUPPORT ASSY.
15	54400-D	4	NUT HEX (#10-32)
16	713038-K1	1	STRIKER ASSY.
17	703250-A	1	RETAINER
18	713123-B	1	SPRING
19	713121-A	3	INDICATOR (TRIP)
20	713122-A	1	PLATE, GUIDE
21	713030-C	3	SPRING
22	703156-A	3	RETAINER
23	713126-A	3	SPRING
24	713037-K1	1	TARGET, SUPPORT ASSY.
25	713039-A	1	DECAL (RESET)
26	713127-A	1	DECAL (FUSES OPEN)
27	713366-A	1	BRACKET, SWITCH
28	713007-A	1	INSULATION
29	713365-A	1	MICRO SWITCH
30	54346-A7	2	SCREW, RD HD (#4-40 x .62)
31	53103-B	2	LOCKWASHER (#4-40)
32	54400-A	2	NUT, HEX (#4-40)
33	650145-B2	2	SCREW (TAPTITE #6-32 x .25)

OPEN FUSE TRIP DEVICE

(T1, T3) LKD

CUST. P. O.	NEXT ASSM. L-11329	ITEM	TYPE	PROD.	CLASS
EPL 712219-T1,T3	BY R. Bryan DATE 9-22-81	CHD. DATE 9-22-81	APP. DATE 9-22-81		

BBC BROWN BOVERI — Brown Boveri Electric, Inc. Manufacturer of I-T-E Electrical Power Equipment

C L-11524 REV. 1

SH. NO. 1 OF 1 SCALE: REDUCED

NO.	REVISIONS	BY & DATE	CHD.	APP.
1	REDRAWN & NEW PARTS LIST	9-23-81		11-12-81

THIS DRAWING IS THE PROPERTY OF BROWN BOVERI ELECTRIC, INC AND CONTAINS PROPRIETARY AND CONFIDENTIAL INFORMATION WHICH MUST NOT BE DUPLICATED, USED, OR DISCLOSED OTHER THAN AS EXPRESSLY AUTHORIZED BY BROWN BOVERI ELECTRIC, INC

PARTS LIST

ITEM NO.	PART NO.	QTY.	DESCRIPTION
1.	700034-K1	1	AUX. SWITCH (4 CONT.)
2.	700038-K1	1	AUX. SWITCH (8 CONT.)
3.	713165-A	1	SWITCH SUPPORT
4.	713306-K1	1	CRANK
5.	650408-A	1	LOCKNUT (#10-32)
6.	54390-A1	2	SCREW (.250)
7.	53103-F	2	LOCKWASHER (.250)

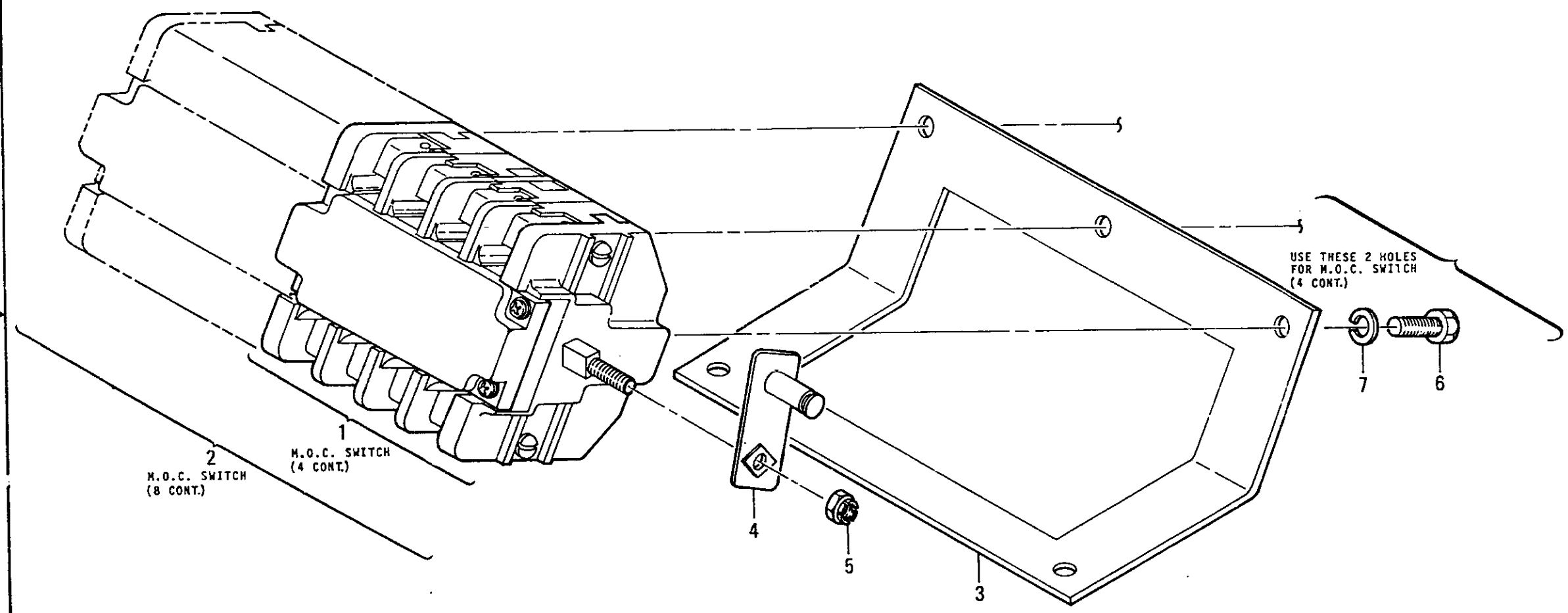

M.O.C. SWITCH

(T1 & T2) LK 8, 16, 25, 32 & 42

CUST. P. O.	NEXT ASSM. L-10982	ITEM	TYPE	PROD.	CLASS
S. O. EPL 712224-T1 T2	BY R. Boyer DATE 6-11-81	CHD. DATE 6-11-81	APP. DATE 6-11-81		

BBC BROWN BOVERI Brown Boveri Electric, Inc. Manufacturer of H-T-E Electrical Power Equipment

C L-11525 2 REV.

SH. NO. 1 of 1 SCALE 1:1

THIS DRAWING IS THE PROPERTY OF BROWN BOVERI ELECTRIC INC AND CONTAINS PROPRIETARY AND CONFIDENTIAL INFORMATION WHICH MUST NOT BE DUPLICATED USED, OR DISCLOSED OTHER THAN AS EXPRESSLY AUTHORIZED BY BROWN BOVERI ELECTRIC INC

NO.	REVISIONS	BY & DATE	CHD.	APP.
2	REDRAWN & ITEM #4 713306-K1 WAS 713306-A	RLB 6-11-81	DAR 7/21/81	DAR 7/21/81

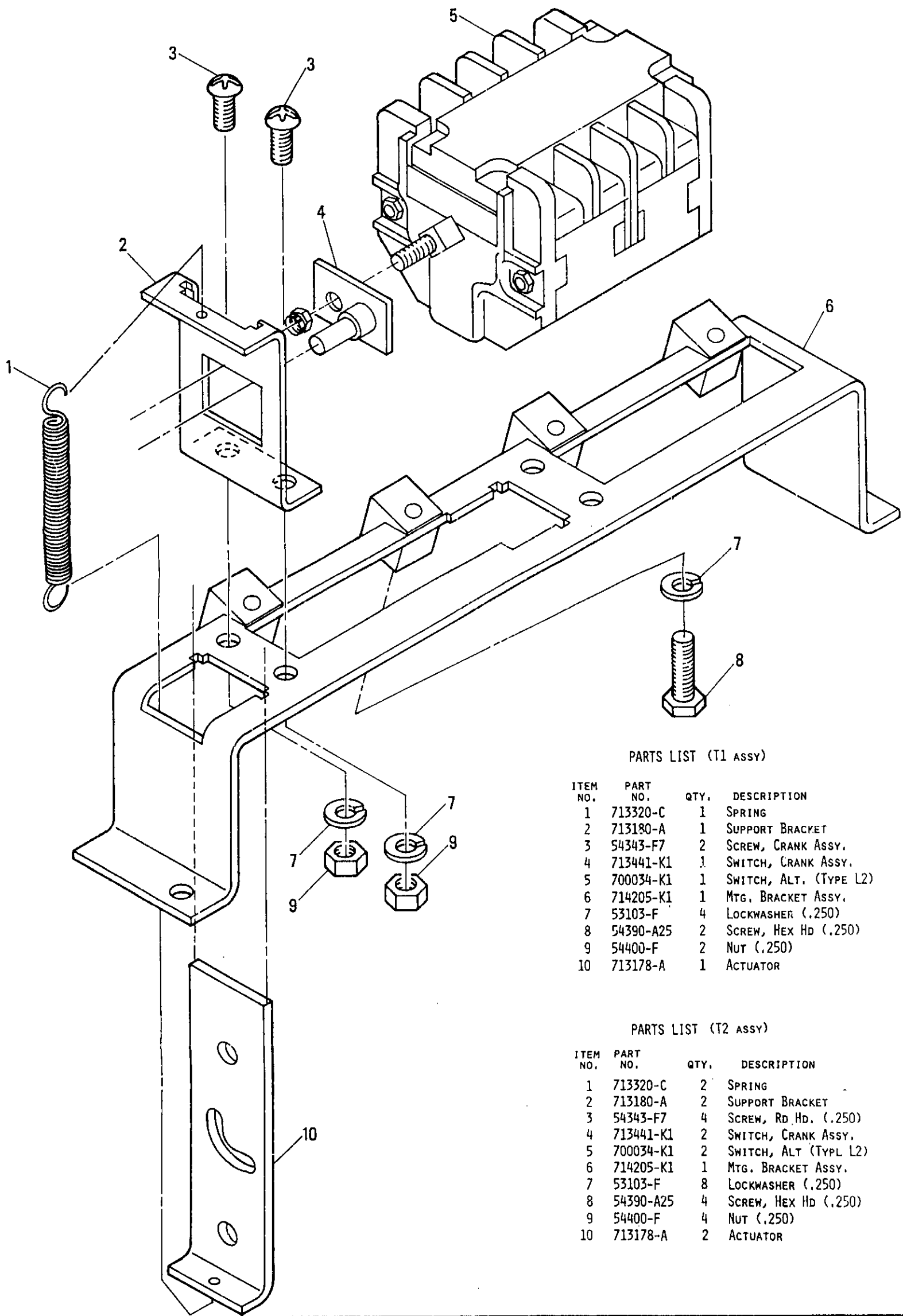

PARTS LIST (T1 ASSY)

ITEM NO.	PART NO.	QTY.	DESCRIPTION
1	713320-C	1	SPRING
2	713180-A	1	SUPPORT BRACKET
3	54343-F7	2	SCREW, CRANK ASSY.
4	713441-K1	1	SWITCH, CRANK ASSY.
5	700034-K1	1	SWITCH, ALT. (TYPE L2)
6	714205-K1	1	MTG. BRACKET ASSY.
7	53103-F	4	LOCKWASHER (.250)
8	54390-A25	2	SCREW, HEX HD (.250)
9	54400-F	2	NUT (.250)
10	713178-A	1	ACTUATOR

PARTS LIST (T2 ASSY)

ITEM NO.	PART NO.	QTY.	DESCRIPTION
1	713320-C	2	SPRING
2	713180-A	2	SUPPORT BRACKET
3	54343-F7	4	SCREW, RD HD. (.250)
4	713441-K1	2	SWITCH, CRANK ASSY.
5	700034-K1	2	SWITCH, ALT (TYPL L2)
6	714205-K1	1	MTG. BRACKET ASSY.
7	53103-F	8	LOCKWASHER (.250)
8	54390-A25	4	SCREW, HEX HD (.250)
9	54400-F	4	NUT (.250)
10	713178-A	2	ACTUATOR

NO.	REVISIONS	BY & DATE	CHKD.	APP.
1	REVISED PARTS LIST			

CUST. P. O.

EPL 712225-T1, T2,

NEXT ASSY. L-11573

ITEM T.O.C. SWITCH

TYPE

PROD. CLASS

BY R. GALASSO DATE 5-12-80

CHKD. DATE 5-15-80

APP. DATE 9-3-80

REV. 1

SIZE C

L-11526

SCALE

SHT. NO. 1 of 1

BBC Brown Boveri Electric, Inc.

Manufacturer of I-T-E Electrical Power Equipment

THIS DRAWING IS THE PROPERTY OF BROWN BOVERI ELECTRIC INC. AND CONTAINS PROPRIETARY AND CONFIDENTIAL INFORMATION WHICH MUST NOT BE DUPLICATED USED OR DISCLOSED OTHER THAN AS EXPRESSLY AUTHORIZED BY BROWN BOVERI ELECTRIC INC

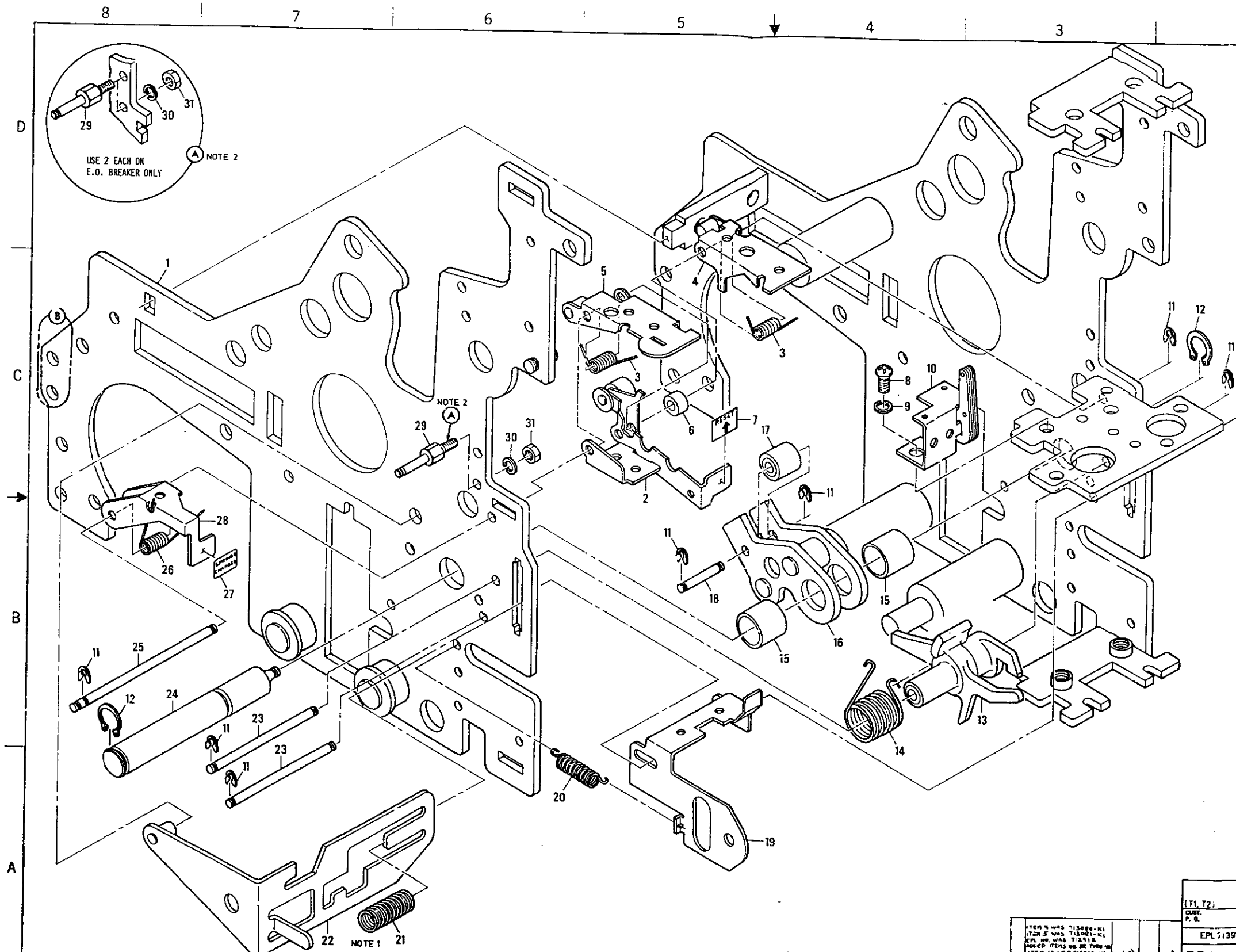

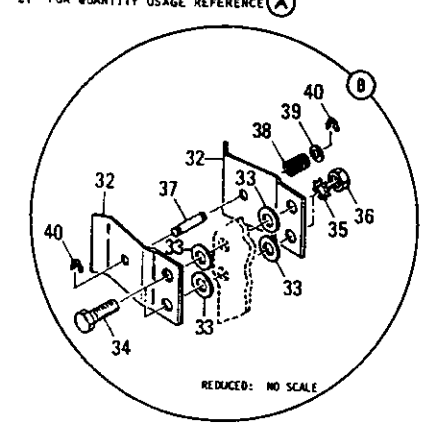

PARTS LIST

ITEM NO.	PART NO.	QTY.	DESCRIPTION
1	712388-K1	1	FRAME ASSY (MECH)
2	713003-K1	1	INDICATOR, AUTO TRIP
3	712161-A	2	SPRING, TORSION
4	714192-K1	1	TRIPPER (U/V & SHUNT TRIP)
5	714193-K1	1	TRIPPER (MAG LATCH)
6	650301-E56	1	SPACER
7	713020-A	1	DECAL (RESET)
8	54343-F4	1	SCREW,RD.HD.,(.250x.375LG)
9	53103-F	1	LOCKWASHER
10	713913-T3	1	LATCH ASSY.
11	703156-A	8	RETAINER
12	650440-A2	2	RETAINER
13	713913-T5	1	TRIP LATCH ASSY.
14	712530-E	1	SPRING, TORSION
15	650301-E73	2	BUSHING
16	714318-K1	1	LATCH, PROP. ASSY.
17	713913-T8	1	ROLLER ASSY.
18	650050-C6	1	PIN, PIVOT
19	712196-A	1	HASP, PADLOCK
20	712170-A	1	SPRING, EXTENSION
21	712181-A	1	SPRING, COMPRESSION
22	712195-K1	1	PLATE, ASSY (RACKING LOCK)
23	650050-C5	2	PIN, PIVOT
24	712347-A	1	PIN, PIVOT
25	650052-J	1	PIN, PIVOT
26	712515-B	1	SPRING
27	712411-A	1	DECAL (SPRINGS CHARGED)
28	712356-A	1	INDICATOR
29	650264-A48	1	STUD, HEX
30	53103-D	1	LOCKWASHER (#8)
31	54400-C	1	NUT (#8-32)
32	712674-A	2	GROUND CONTACT - MOVING
33	54500-F	4	WASHER (.250 I.D.)
34	54390-A4	2	SCREW, HX HD (.250 X 1.00)
35	650373-A	2	SHAKEPROOF LWR (.250 I.D.)
36	54400-F	2	NUT (.250 - 20)
37	54124-A19	1	PIN (3/16" DIA. X 7/8" LG.)
38	650201-A25	1	SPRING (.615 LG.)
39	50701-A35	1	WASHER (.375 O.D.)
40	703156-A	2	RETAINER

NOTES:
1. ITEM 21 AND 22 TO BE DELETED ON STATIONARY BREAKER.
2. FOR QUANTITY USAGE REFERENCE (A)

NO.	REVISIONS	BY & DATE	CHD.	APP.
1	ITEM 4 WAS 713086-K1 ITEM 5 WAS 713091-K1 REF. NO. WAS 713313. ADDED ITEMS NO. 26 THRU 40 ITEM 16 WAS 712508-K1 ITEM 8 WAS 712068-E REVISED PARTS LIST ADDED NOTE 2			

OPERATING MECHANISM
STAGE I

(T1, T2)

CUST. P. O.: EPL 713912

NEXT ASSM.: L-11348 | ITEM | TYPE | PROD. | CLASS: LK

BY DATE 6-4-80 | CHD. DATE 8-20-80 | APP. DATE 9-3-80

BBC Brown Boveri Electric, Inc.

D | L-11527 | REV. 1

SH. NO. 1 OF 1 | SCALE 1:1

THE DRAWING IS THE PROPERTY OF BROWN BOVERI ELECTRIC INC. AND CONTAINS PROPRIETARY AND CONFIDENTIAL INFORMATION WHICH MUST NOT BE REPRODUCED, USED, OR DISCLOSED WITHOUT AN EXPRESS WRITTEN AUTHORIZATION FROM BROWN BOVERI ELECTRIC INC.

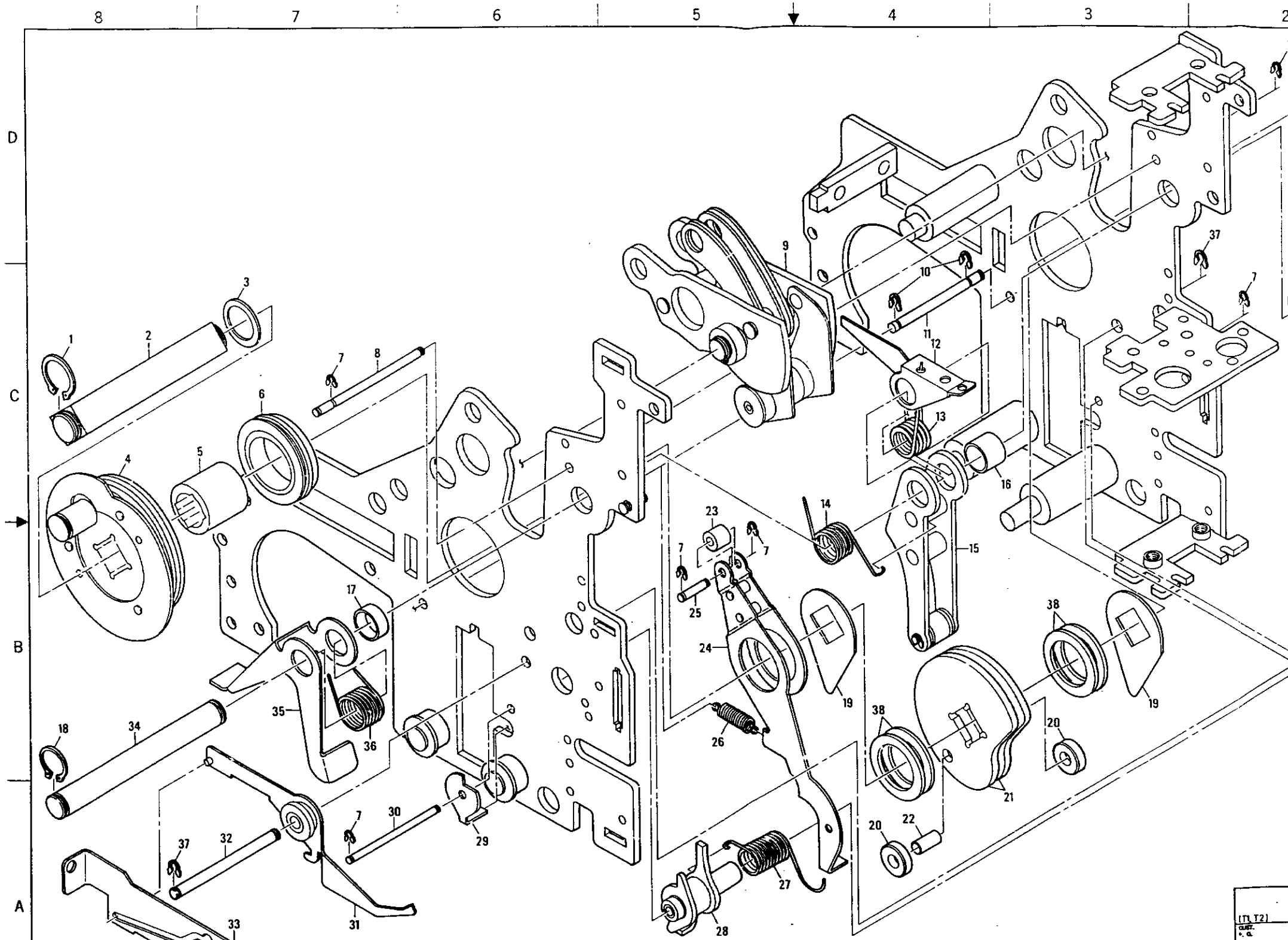

PARTS LIST

ITEM NO.	PART NO.	QTY.	DESCRIPTION
1	650440-A3	2	RETAINER
2	712191-A	1	SHAFT, CAM
3	50702-B96	AR	WASHER, SHIM (25/32 I.D.)
4	713116-K2	1	ARM ASSY (CRANK)
5	712182-A	2	RACE, INNER
6	713913-T5	2	BUSHING ASSY. (CAM SHAFT)
7	703156-A	6	RETAINER
8	712327-A	1	PIN
9	713913-T1	1	TOGGLE & LINK ASSY.
10	703250-A	2	RETAINER
11	650352-A1	1	PIN
12	712310-A	1	ACTUATOR, VISUAL
13	712530-D	1	SPRING, TORSION
14	712530-C	1	SPRING, TORSION
15	713913-T10	1	TRACK ASSY.
16	650301-E62	1	BUSHING
17	650301-E67	3	BUSHING
18	650440-A2	2	RETAINER
19	712178-B	2	BLOCK, PROP LATCH
20	714030-A	2	ROLLER
21	714430-A	2	CAM, CLOSING
22	650032-A10	1	PIN, CAM
23	650301-E80	1	BUSHING
24	712307-K1	1	LEVER (INTERLOCKING)
25	650050-C13	1	PIN, PIVOT
26	713320-B	1	SPRING, EXTENSION
27	712588-A	1	SPRING, TORSION
28	713913-T7	1	LATCH, CLOSE ASSY.
29	713129-A	1	LEVER (WITHDRAWAL TRIP)
30	650050-C14	1	PIN, PIVOT
31	712343-K1	1	INDICATOR (POSITION)
32	650050-B96	1	PIN, PIVOT
33	712344-A	1	PLATE (POSITION IND.)
34	650050-C3	1	PIN, PIVOT
35	712322-A	1	LEVER (SW. MOTOR)
36	712615-C	1	SPRING, TORSION
37	703250-A	2	RETAINER
38	650351-B31	4	SPACER WASHER

NOTES:

1. ITEMS NO. 29, 31, 32, 33 & 37 TO BE DELETED ON STATIONARY BREAKER.

OPERATING MECHANISM
STAGE II
(T1 T2)

LK

CUST. P. O.	NEXT ASSM. L-11348	ITEM	TYPE	PROD.	CLASS
L. O. EPL 713912	BY DATE 6-25-80	CHD. DATE 6-20-80	APP. DATE 7-3-80		

BBC Brown Boveri Electric, Inc.

D L-11528 REV. 1

SH. NO. 1 OF 1 SCALE REDUCED

NO.	REVISIONS	BY & DATE	CHD.	APP.	NO.	REVISIONS	BY & DATE	CHD.	APP.	NO.	REVISIONS	BY & DATE	CHD.	APP.
1	ITEM NO. 38 WAS ITEM NO. 27. REVISED PARTS LIST + NOTES. DELETED ITEMS NO. 7, 8, 9, 10, 11, 12, 13, 14, 15, 16, 17, 18, 19, 20, 21, 22, 23, 24, 25, 26, 27, 28, 29, 30, 31, 32, 33, 34, 35, 36, 37. ITEM 21 WAS ITEM 4, & (714428-A).													

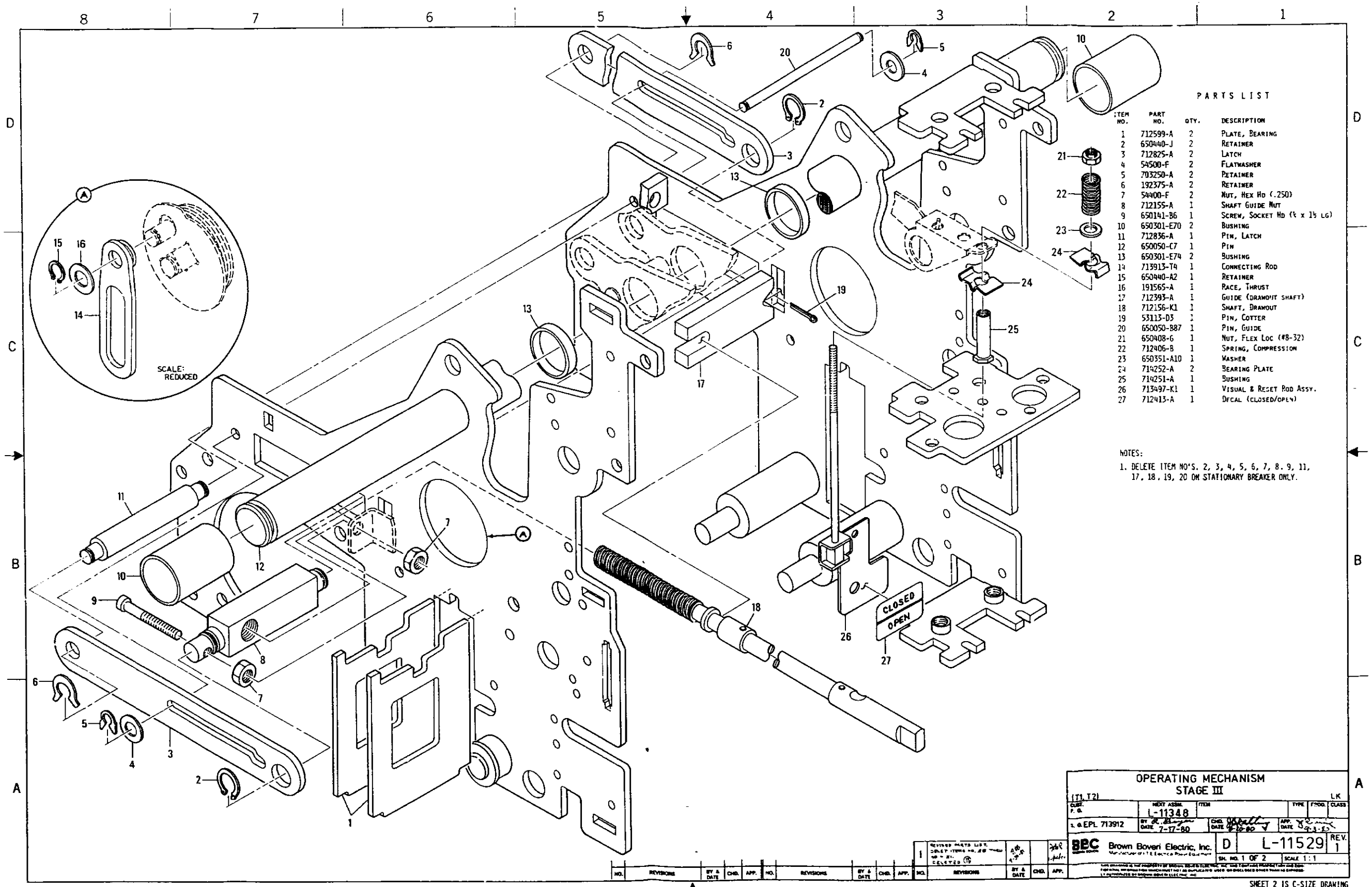

PARTS LIST

ITEM NO.	PART NO.	QTY.	DESCRIPTION
1	712599-A	2	PLATE, BEARING
2	650440-J	2	RETAINER
3	712825-A	2	LATCH
4	54500-F	2	FLATWASHER
5	703250-A	2	RETAINER
6	192375-A	2	RETAINER
7	54400-F	2	NUT, HEX HD (.250)
8	712155-A	1	SHAFT GUIDE NUT
9	650141-B6	1	SCREW, SOCKET HD (¼ x 1½ LG)
10	650301-E70	2	BUSHING
11	712836-A	1	PIN, LATCH
12	650050-C7	1	PIN
13	650301-E74	2	BUSHING
14	713913-T4	1	CONNECTING ROD
15	650440-A2	1	RETAINER
16	191565-A	1	RACE, THRUST
17	712393-A	1	GUIDE (DRAWOUT SHAFT)
18	712156-K1	1	SHAFT, DRAWOUT
19	53113-D3	1	PIN, COTTER
20	650050-B87	1	PIN, GUIDE
21	650408-6	1	NUT, FLEX LOC (#8-32)
22	712406-B	1	SPRING, COMPRESSION
23	650351-A10	1	WASHER
24	714252-A	2	BEARING PLATE
25	714251-A	1	BUSHING
26	713497-K1	1	VISUAL & RESET ROD ASSY.
27	712413-A	1	DECAL (CLOSED/OPEN)

NOTES:

1. DELETE ITEM NO'S. 2, 3, 4, 5, 6, 7, 8, 9, 11, 17, 18, 19, 20 ON STATIONARY BREAKER ONLY.

NO.	REVISIONS	BY & DATE	CHD.	APP.
1	REVISED PARTS LIST. DELETE ITEMS 18, 20 [illegible] DELETED	[illegible]		[illegible]

OPERATING MECHANISM
STAGE III

(T1, T2) LK

CUST. P. O. | NEXT ASSM. L-11348 | ITEM | TYPE | PROD. | CLASS

2 @ EPL 713912 | BY [illegible] DATE 7-17-80 | CHD. [illegible] DATE 7-22-80 | APP. [illegible] DATE 7-23-80

BBC Brown Boveri Electric, Inc. | D | L-11529 | REV. 1

SH. NO. 1 OF 2 | SCALE 1:1

THIS DRAWING IS THE PROPERTY OF BROWN BOVERI ELECTRIC INC. AND CONTAINS PROPRIETARY AND CONFIDENTIAL INFORMATION. NO REPRODUCTION WHICH MIGHT FACILITATE UNAUTHORIZED USE OR DISCLOSURE OTHER THAN AS EXPRESSLY AUTHORIZED BY BROWN BOVERI ELECTRIC INC.

SHEET 2 IS C-SIZE DRAWING

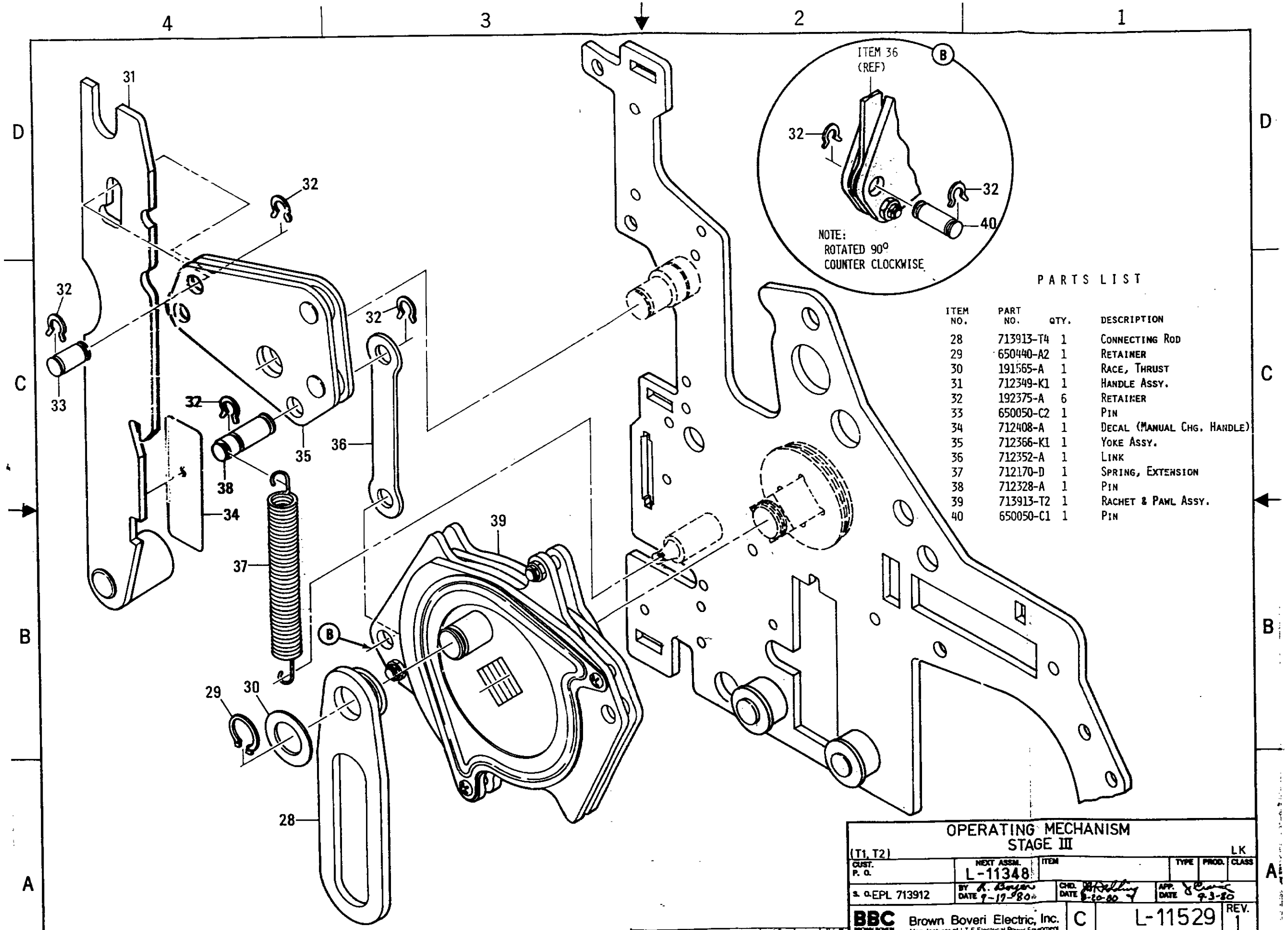

PARTS LIST

ITEM NO.	PART NO.	QTY.	DESCRIPTION
28	713913-T4	1	CONNECTING ROD
29	650440-A2	1	RETAINER
30	191565-A	1	RACE, THRUST
31	712349-K1	1	HANDLE ASSY.
32	192375-A	6	RETAINER
33	650050-C2	1	PIN
34	712408-A	1	DECAL (MANUAL CHG. HANDLE)
35	712366-K1	1	YOKE ASSY.
36	712352-A	1	LINK
37	712170-D	1	SPRING, EXTENSION
38	712328-A	1	PIN
39	713913-T2	1	RACHET & PAWL ASSY.
40	650050-C1	1	PIN

OPERATING MECHANISM
STAGE III

(T1, T2) LK

CUST. P. O.	NEXT ASSM. L-11348	ITEM	TYPE	PROD.	CLASS
S. O. EPL 713912	BY R. Boyer DATE 9-17-80	CHD. DATE 9-30-80	APP. DATE 9-3-80		

BBC BROWN BOVERI — Brown Boveri Electric, Inc.
Manufacturer of I-T-E Electrical Power Equipment

C | L-11529 | REV. 1

SH. NO. 2 OF 2 | SCALE REDUCED

THIS DRAWING IS THE PROPERTY OF BROWN BOVERI ELECTRIC, INC. AND CONTAINS PROPRIETARY AND CONFIDENTIAL INFORMATION WHICH MUST NOT BE DUPLICATED, USED, OR DISCLOSED OTHER THAN AS EXPRESSLY AUTHORIZED BY BROWN BOVERI ELECTRIC, INC.

NO.	REVISIONS	BY & DATE	CHD.	APP.	NO.	REVISIONS	BY & DATE	CHD.	APP.	NO.	REVISIONS	BY & DATE	CHD.	APP.
										1	REVISED PARTS LIST. (B) WAS (C)	10-9-81		

SHEET 1 IS D-SIZE DRAWING

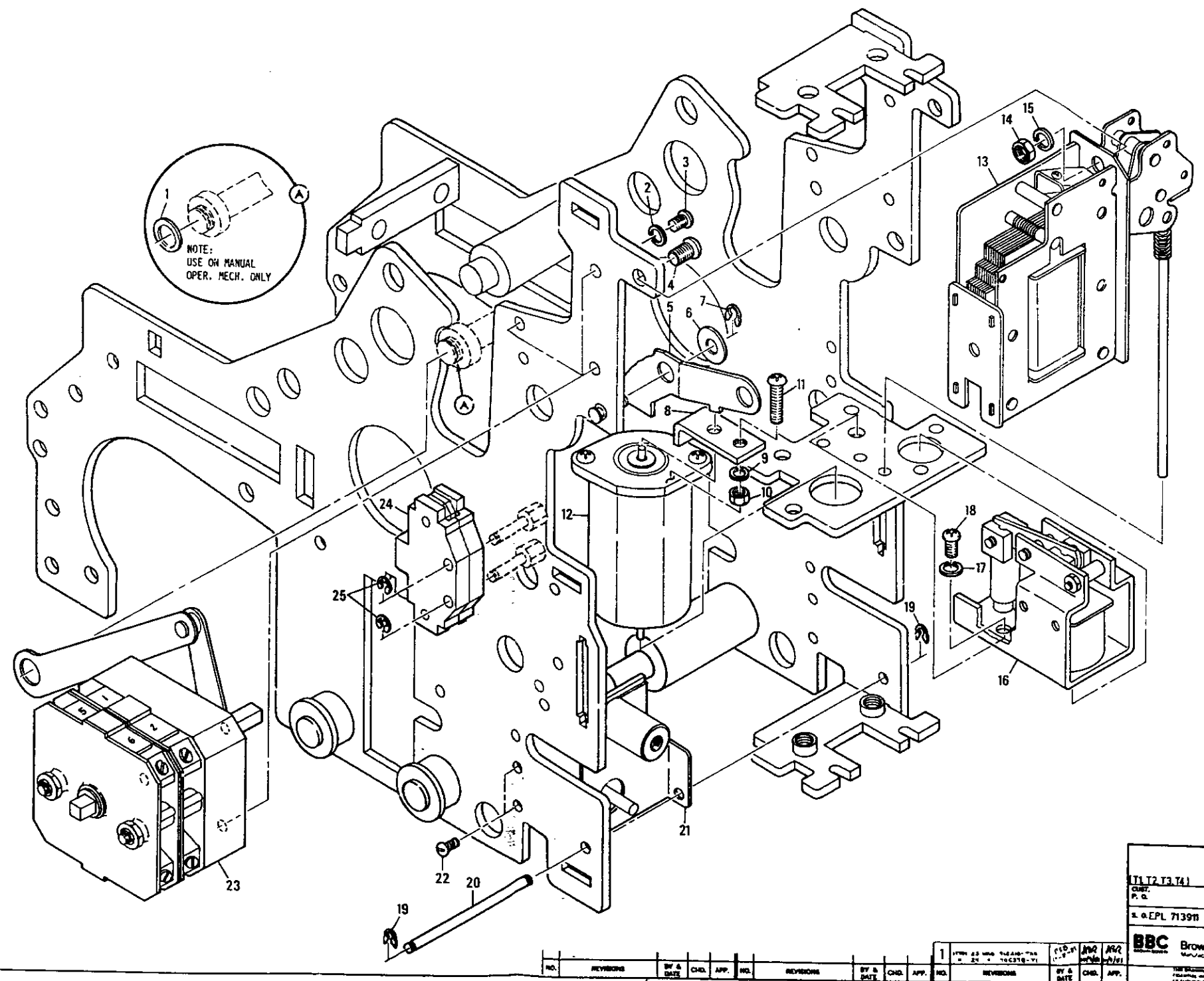

PARTS LIST

ITEM NO.	PART NO.	QTY.	DESCRIPTION
1	650351-A19	1	WASHER (17/32 I.D.)
2	53103-E	3	LOCKWASHER (#10-32)
3	54343-D6	3	SCREW, RD. HD.
4	54343-F7	1	SCREW, RD. HD. (.250x.62Lg)
5	713438-A	1	CLAMP, MOUNTING
6	54500-F	1	WASHER (.250 I.D.)
7	703250-A	1	RETAINER
8	714255-A	1	BRACE
9	53103-E	1	LOCKWASHER (#10-32)
10	54400-D	1	NUT (#10-32)
11	54343-D8	1	SCREW (#10-32 .75LG)
12	712293-T1	1	MAGNETIC LATCH
13	712215-TXX	1	UNDERVOLTAGE TRIP
14	54400-F	1	NUT (.25)
15	53103-F	1	LOCKWASHER (.25 I.D.)
16	712214-TXX	1	SHUNT TRIP
17	53103-F	1	LOCKWASHER (.25 I.D.)
18	54343-F4	1	SCREW, RD. HD. (.250x.38Lg)
19	703156-A	2	RETAINER
20	650050-C5	1	PIN
21	712217-T10	1	MANUAL CLOSING DEVICE
22	50337-A12	2	SCREW SELF TAP
23	712210-T1	1	"L3" AUX. SW. (4 CONTACT)
24	198946-T1	1	LIMIT SWITCH
25	53153-C	2	"E" RING

NOTES:
1. FOR ITEM NO'S. WITH -TXX FOLLOWING THEM, REFER TO SHEET 3 FOR INSTRUCTIONS

OPERATING MECHANISM
(T1 T2 T3 T4) STAGE IV
LK

CUST. P. O.
NEXT ASSM. L-11348
ITEM
TYPE | PROD. | CLASS
2 ea EPL 713911
BY R. Kagan DATE 8-18-80
CHD. DATE 8-20-80
APP. DATE 9-3-80

BBC Brown Boveri Electric, Inc.
D L-11530 REV. 1
SH. NO. 1 OF 3
SCALE 1:1

NO.	REVISIONS	BY & DATE	CHD.	APP.	NO.	REVISIONS	BY & DATE	CHD.	APP.	NO.	REVISIONS	BY & DATE	CHD.	APP.

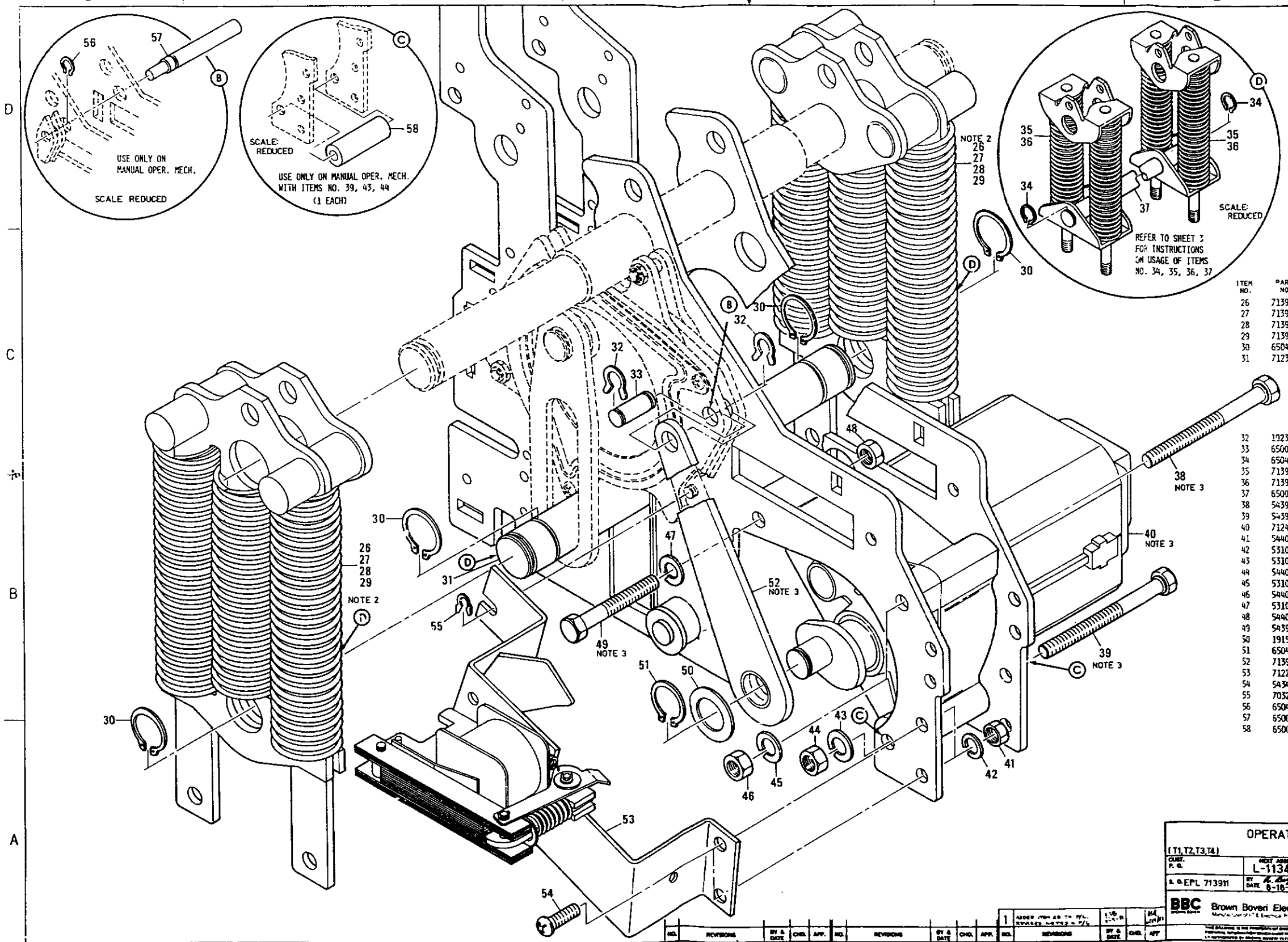

NOTES:

1. FOR ITEM NO'S. WITH - TXX FOLLOWING THEM, REFER TO SHEET 3 FOR INSTRUCTIONS
2. REFER TO SHEET 3 FOR INSTRUCTIONS ON USAGE OF ITEMS NO. 26, 27, 28, 29, 30, 31.
3. SEE SHEET 3 FOR USAGE OF ITEM NO. 38, 39, 40, 49, 52.

PARTS LIST

ITEM NO.	PART NO.	QTY.	DESCRIPTION
26	713910-T1	2	Closing Spring Assy.
27	713910-T2	2	Closing Spring Assy.
28	713910-T6	2	Closing Spring Assy.
29	713910-T7	2	Closing Spring Assy.
30	650440-A4	4	Retainer
31	712319-A	1	Pin (Closing Spring)
32	192375-A	2	Retainer
33	650050-C1	1	Pin
34	650440-A4	2	Retainer
35	713910-T3	2	Closing Spring Assy.
36	713910-T8	2	Closing Spring Assy.
37	650050-C12	1	Pin
38	54390-B11	1	Screw, Hex Hd(.312x3"Lg)
39	54390-B11	1	Screw, Hex Hd(.312x3"Lg)
40	712417	1	Gear Head Motor
41	54400-F	2	Nut (.250)
42	53103-F	2	Lockwasher (.250)
43	53103-S	1	Lockwasher (.312)
44	54400-G	1	Nut (.312)
45	53103-G	1	Lockwasher (.312)
46	54400-G	1	Nut (.312)
47	53103-G	1	Lockwasher (.312)
48	54400-G	1	Nut (.312)
49	54390-B8	1	Screw, Hex Hd(.312x2"Lg)
50	191565-A	1	Race, Thrust
51	650440-A2	1	Retainer
52	713913-T9	1	Motor Link Assy.
53	712218-TXX	1	"Y" Relay
54	54343-F8	2	Screw, Rd Hd(.250x.75Lg)
55	703250-A	1	Retainer
56	650440-J	1	Retainer
57	650060-A5	1	Pin
58	650031-E69	1	Bushing

OPERATING MECHANISM
STAGE IV
(T1,T2,T3,T4)

CUST. P. GL | PROJ. ABBR. L-11348 | ITEM | TYPE | PROD. | CLASS
S. O. EPL 713911 | BY DATE 8-18-80 | CHD. DATE 9-29-80 | APP. DATE 9-3-80

BBC Brown Boveri Electric, Inc.

D L-11530 REV. 1
SH. NO. 2 OF 3 | SCALE 1:1

NO.	REVISIONS	BY & DATE	CHD.	APP.	NO.	REVISIONS	BY & DATE	CHD.	APP.	NO.	REVISIONS	BY & DATE	CHD.	APP.
										1	ADDED ITEM 40 TO P/L. REVISED NOTES TO P/L			

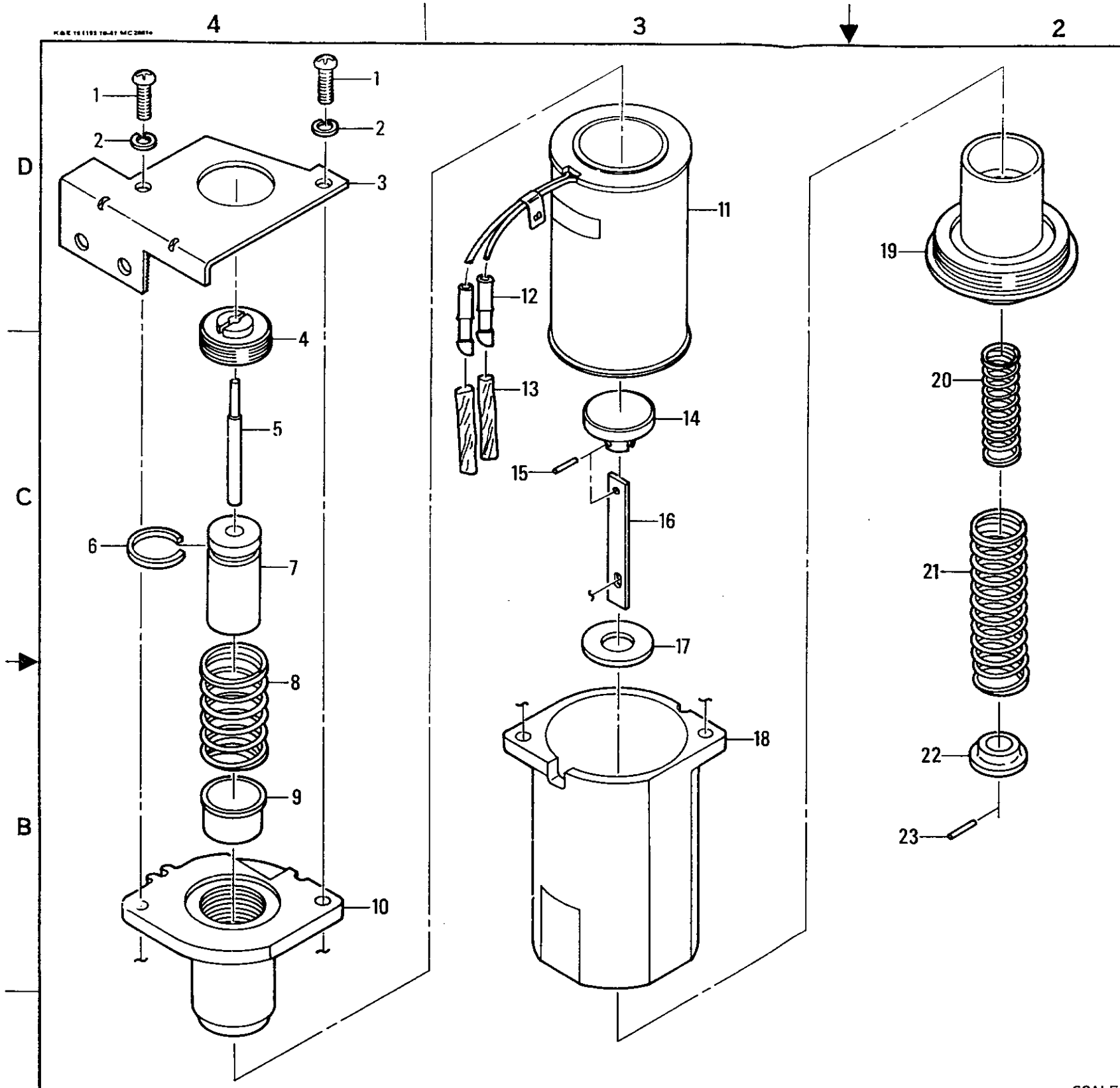

PARTS LIST

ITEM NO.	PART NO.	QTY.	DESCRIPTION
1	54343-B6	2	SCREW, RD HD (#6-32 X .50 LG)
2	53103-C	2	LOCKWASHER (#6)
3	714621-A	1	PLATE, TOP KEEPER
4	712868-A	1	PLUG, CORE
5	713356-A	1	ROD, KICKOFF
6	650433-A	1	RING, RETAINING
7	713153-B	1	MAGNET
8	712539-C	1	SPRING, COMPRESSION
9	712869-A	1	BUSHING
10	714605-A	1	TOP CAP
11	713856-K1	1	COIL ASSEMBLY
12	703418-A	2	WIRE DISCONNECTS
13	650311-A44	2	COVER, DISCONNECT (TUBE)
14	712873-B	1	ARMATURE
15	650032-A8	1	PIN (.280 LG)
16	713429-A	1	LINK, TRIP
17	712892-A	1	GUIDE, ARM
18	714603-A	1	HOUSING
19	714607-A	1	BOTTOM CAP
20	712181-E	1	SPRING, COMPRESSION
21	712181-D	1	SPRING, COMPRESSION
22	713858-A	1	RETAINER, SPRING
23	650032-A9	1	PIN (.422 LG)

SCALE: 1:1

STANDARD TOLERANCE INFO ON DR 52015
TOLERANCES – UNLESS OTHERWISE SPECIFIED – 3 PL DEC. ±

DIMENSIONS ARE IN INCHES
2 PL DEC ±

MAGNETIC LATCH ASSY.

(T3)

LK

BBC BROWN BOVERI — Brown Boveri Electric, Inc.
Manufacturer of I-T-E Electrical Power Equipment

L-11531

SHEET NO. 1 of 1 — CONT ON

2 REV.

NO.	REVISIONS	BY & DATE	NO.	REVISIONS	BY & DATE	NO.	REVISIONS	BY & DATE
						2	REDRAWN & PARTS LISTED TO NEW CONFIGURATION. (VOIDED REV. 1)	RJB 7-29-82

NEXT ASSY. L-13030
S.O. EPL 712293-T3

BY R. Boyer DATE 7-28-82
CHD. DATE 8-13-82
APP. DATE 8-13-82
MICRO.

THIS DRAWING IS THE PROPERTY OF BROWN-BOVERI ELECTRIC, INC AND CONTAINS PROPRIETARY AND CONFIDENTIAL INFORMATION WHICH MUST NOT BE DUPLICATED USED OR DISCLOSED OTHER THAN AS EXPRESSLY AUTHORIZED BY BROWN-BOVERI ELECTRIC, INC

PARTS LIST

ITEM NO.	PART NO.	QTY.	DESCRIPTION
1	714395-K1	1	ARC CHUTE (SUB ASSY)
2	714405-A	1	MOLDING
3	54500-F	1	FLAT WASHER (.250)
4	53103-F	1	LOCKWASHER (.250)
5	54390-A3	1	HEX HD. SCREW (.250)
6	714366-A	1	RETAINER
7	713132-A	1	BARRIER (SUPPORT)
8	650284-D	2	RIVET (PLASTIC)
9	714364-B	1	REAR ARC RUNNER
10	714388-A	2	SIDE BARRIER
11	714364-A	1	FRONT ARC RUNNER
12	714361-A	18	ARC PLATE

NOTE:

1. ARC PLATES (ITEM NO. 12) MUST BE ASSEMBLED WITH CONTOURS ALTERNATELY POSITIONED.

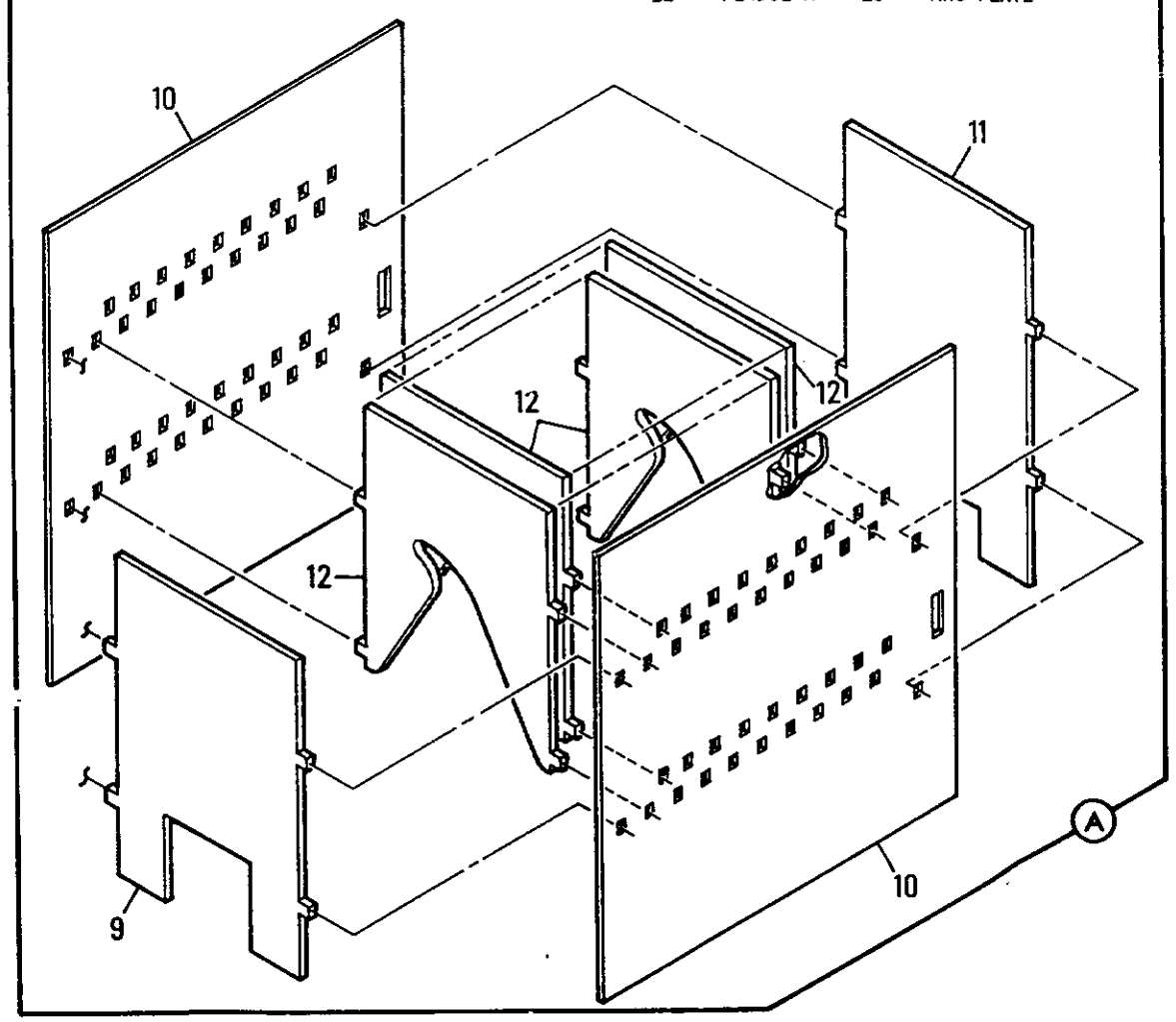

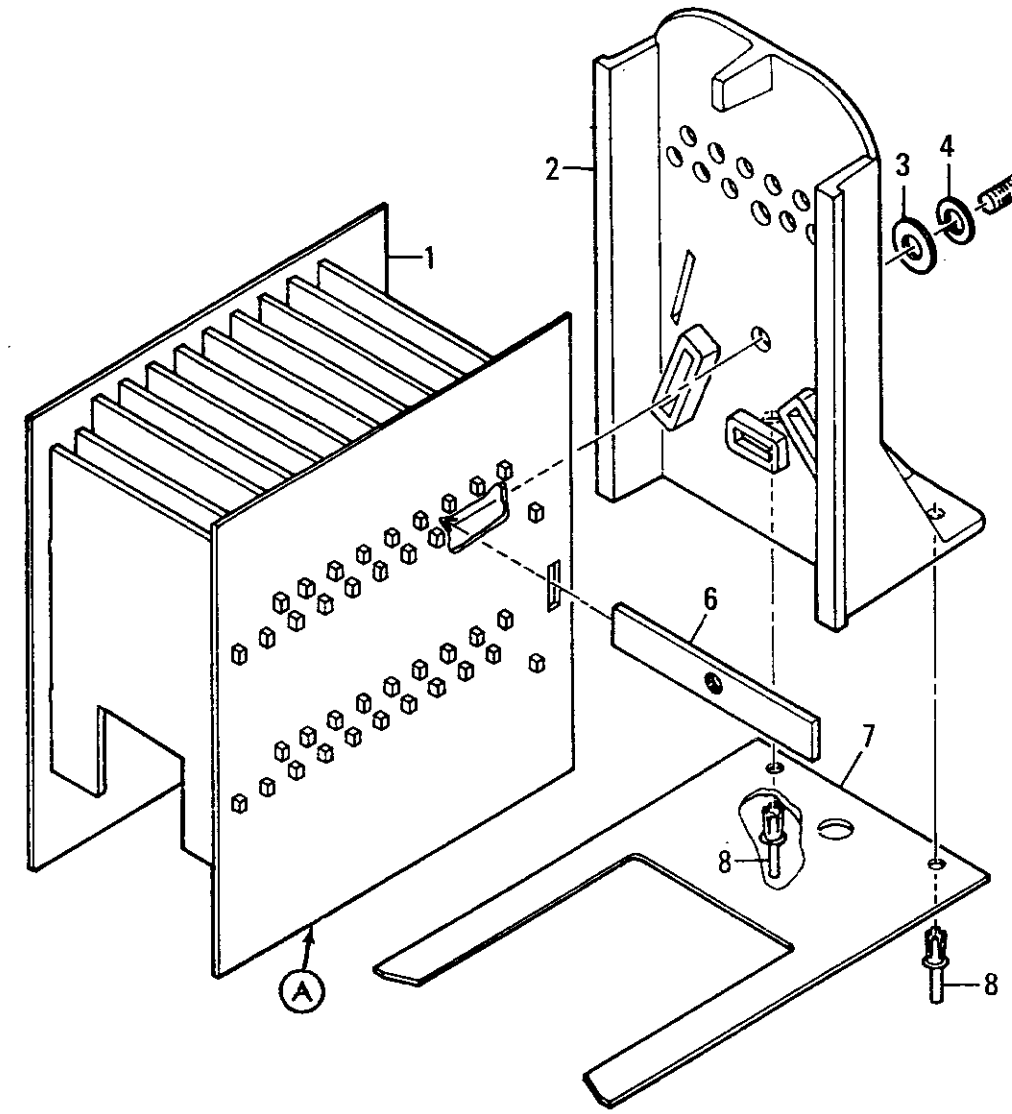

ARC CHUTE ASSEMBLY

(T2) LK8 & 16

CUST. P. O.	NEXT ASSM. L-11640	ITEM	TYPE	PROD.	CLASS
S. O. EPL 712207-T2	BY R. Bryan DATE 5-27-81	CHD. DATE 6-9-81	APP. DATE 6-9-81		

BBC BROWN BOVERI — Brown Boveri Electric, Inc. Manufacturer of I-T-E Electrical Power Equipment

C L-11539 REV. 0

SH. NO. 1 of 1 SCALE: REDUCED

THIS DRAWING IS THE PROPERTY OF BROWN BOVERI ELECTRIC, INC. AND CONTAINS PROPRIETARY AND CONFIDENTIAL INFORMATION WHICH MUST NOT BE DUPLICATED, USED, OR DISCLOSED OTHER THAN AS EXPRESSLY AUTHORIZED BY BROWN BOVERI ELECTRIC, INC.

NO.	REVISIONS	BY & DATE	CHD.	APP.	NO.	REVISIONS	BY & DATE	CHD.	APP.	NO.	REVISIONS	BY & DATE	CHD.	APP.

NOTE:
1. ARC PLATES (ITEM NO. 12) MUST BE ASSEMBLED WITH CONTOURS ALTERNATELY POSITIONED.

PARTS LIST

ITEM NO.	PART NO.	QTY.	DESCRIPTION
9.	714360-A	1	REAR ARC RUNNER
10.	714379-A	2	SIDE BARRIERS
11.	714381-A	1	FRONT ARC RUNNER
12.	714365-A	18	ARC PLATES

PARTS LIST

ITEM NO.	PART NO.	QTY.	DESCRIPTION
1.	714390-K1	1	ARC CHUTE (SUB ASSY)
2.	714377-A	1	COVER MOULDING
3.	54500-F	4	FLAT WASHER (.250)
4.	53103-F	4	LOCKWASHER (.250)
5.	54390-A3	4	HEX. HD. SCREW (.250)
6.	714363-A	2	RETAINER
7.	714378-A	1	SUPPORT BARRIER
8.	650284-D	2	RIVET (PLASTIC)

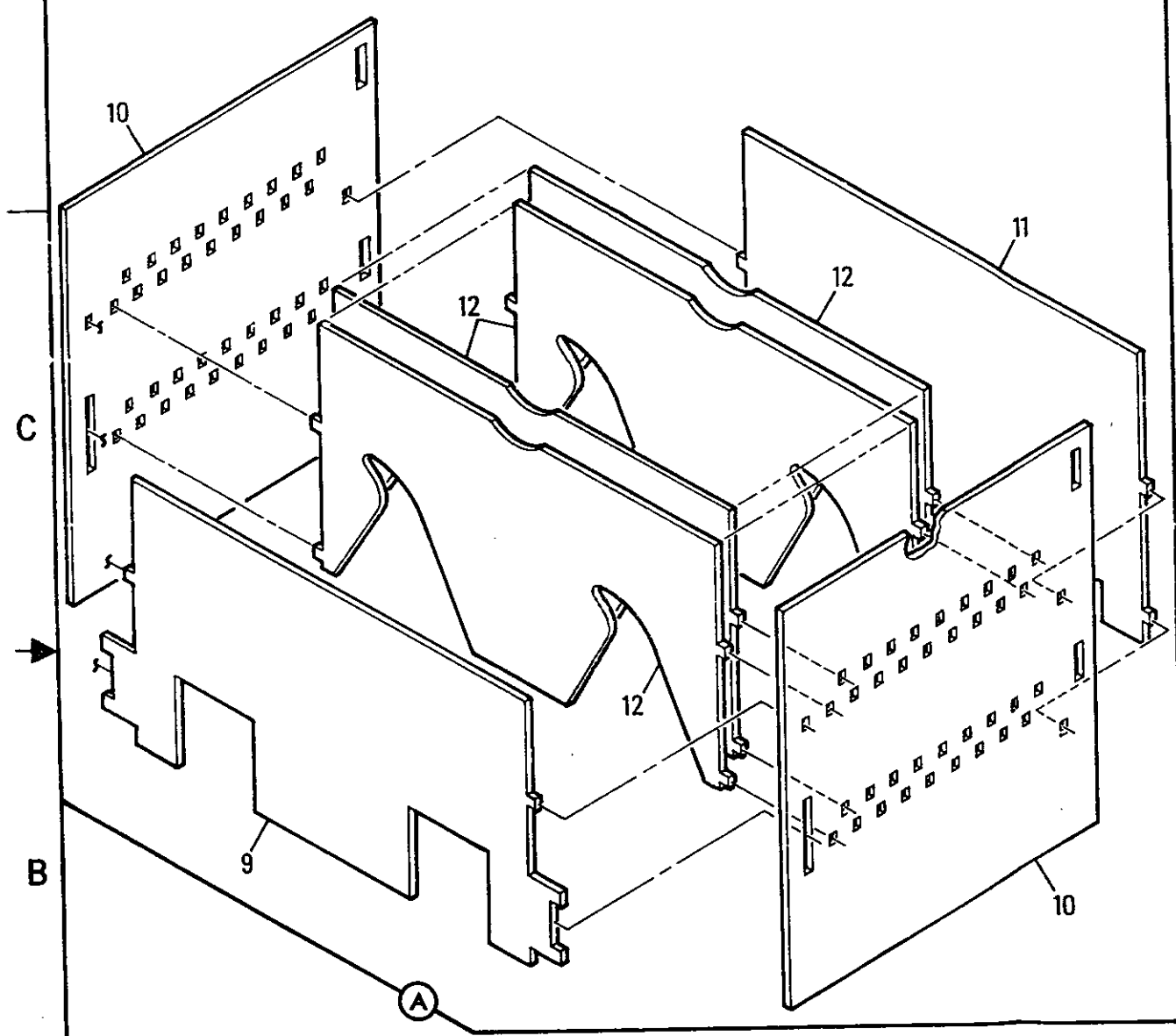

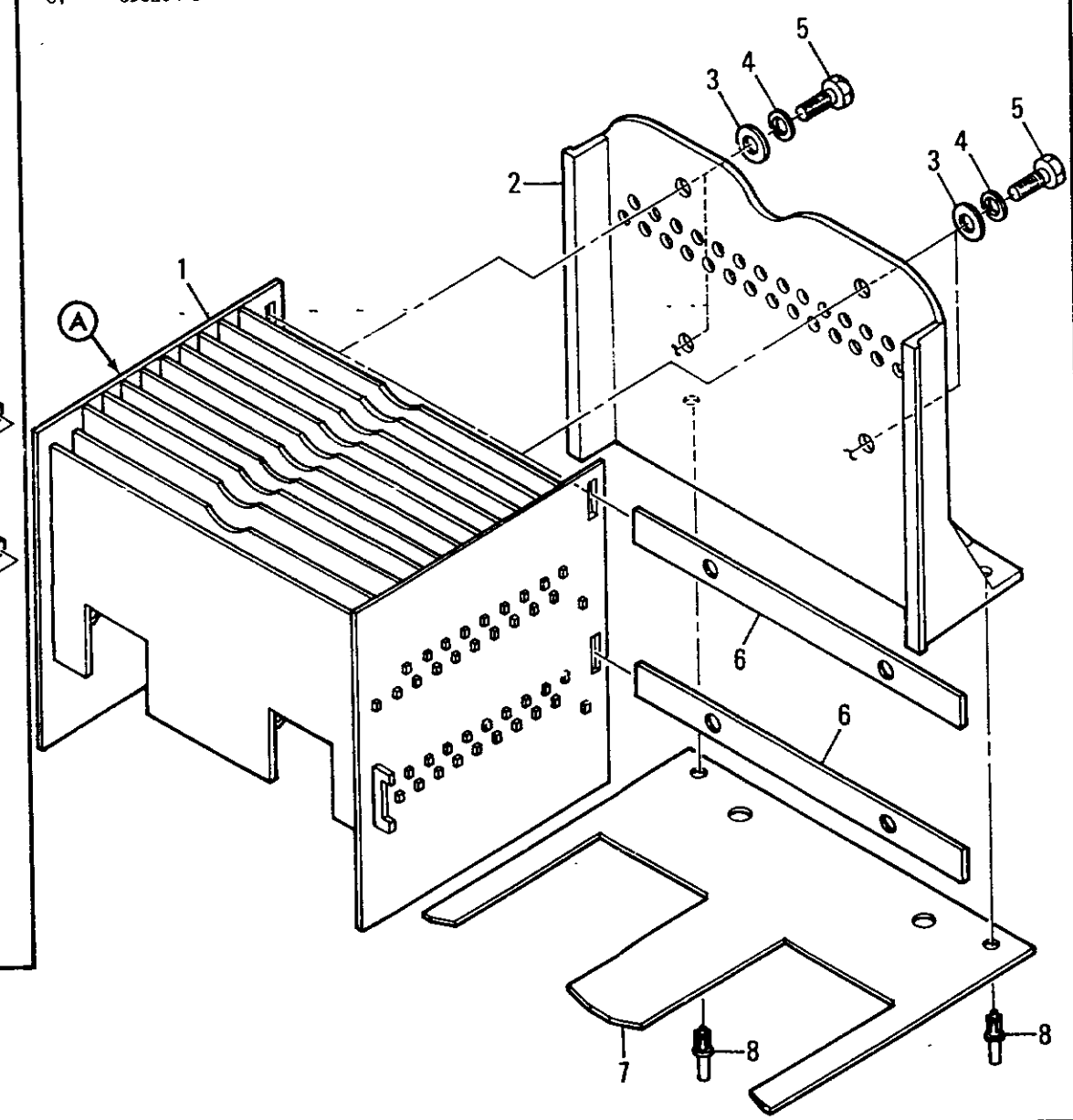

ARC CHUTE ASSEMBLY

(T3) LK 25, 32 & 42

CUST. P. O.	NEXT ASSM. L-11544	ITEM	TYPE	PROD.	CLASS
S. O. EPL 712207-T3	BY R. Rogers DATE 6-8-81	CHD. DATE 6-9-81	APP. DATE 6-9-81		

BBC BROWN BOVERI — Brown Boveri Electric, Inc. Manufacturer of I-T-E Electrical Power Equipment

C L-11540 REV. 0

SH. NO. 1 of 1 SCALE: REDUCED

NO.	REVISIONS	BY & DATE	CHD.	APP.	NO.	REVISIONS	BY & DATE	CHD.	APP.	NO.	REVISIONS	BY & DATE	CHD.	APP.

THIS DRAWING IS THE PROPERTY OF BROWN BOVERI ELECTRIC INC AND CONTAINS PROPRIETARY AND CONFIDENTIAL INFORMATION WHICH MUST NOT BE DUPLICATED, USED, OR DISCLOSED OTHER THAN AS EXPRESSLY AUTHORIZED BY BROWN BOVERI ELECTRIC INC

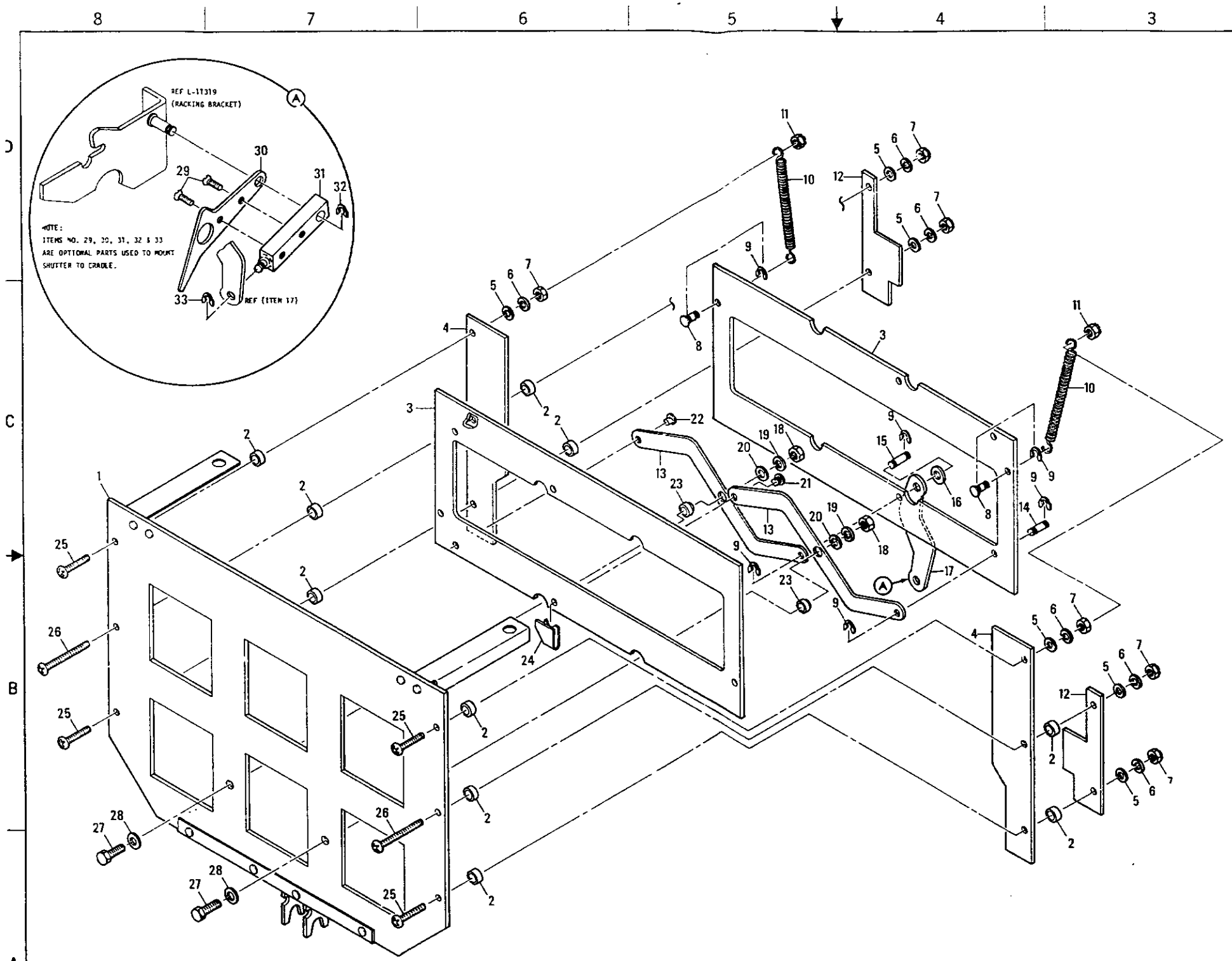

PARTS LIST

ITEM NO.	PART NO.	QTY.	DESCRIPTION
1	713823-K1	1	PANEL, FRONT ASSY.
2	650301-E83	10	BUSHING
3	713818-A	2	SHUTTER
4	713814-A	2	GUIDE, UPPER
5	54500-D	6	FLATWASHER (#10)
6	53103-E	6	LOCKWASHER (#10)
7	54400-D	6	NUT, HEX (#10-32)
8	713816-B	2	PIN, SHOULDERED
9	703250-A	6	RING, RETAINING
10	714232-B	2	SPRING, EXTENSION
11	650408-A	2	LOCKNUT (FLEXLOC #10-32)
12	713813-A	2	GUIDE, LOWER
13	713813-A	2	LINK
14	650050-C8	1	PIN
15	650051-A26	1	PIN
16	650351-A1	1	WASHER
17	714406-A	1	LINK
18	54400-F	2	NUT, HEX (.250)
19	53103-F	2	LOCKWASHER (.250)
20	650351-A24	2	WASHER
21	713873-A	1	PIN, LINK
22	650079-A9	1	PIN, SHOULDERED
23	650316-A65	2	BUSHING
24	714272-A	1	CLIP, RETAINING
25	54343-D11	8	SCREW, RD HD (1.25" LG)
26	54343-D15	2	SCREW, RD HD (2.00" LG)
27	54390-A4	2	SCREW, HEX HD (.250 x 1.00" LG)
28	54500-F	2	FLATWASHER (.250)
29	54357-D7	2	SCREW, PHILLIPS FL HD (.62" LG)
30	714407-A	1	ACTUATOR
31	714236-A	1	OPERATING ARM
32	702312-A	1	RING, RETAINING
33	703156-A	1	RETAINER

SHUTTER ASSY.

(T1) LK 8 & 16

CUST. P. O.	NEXT ASSEM.	ITEM	TYPE	PROD.	CLASS
	L-11389				

EPL 712250-T1 | BY R. Harper DATE 8-26-81 | CHKD. DATE 8-27-81 | APP. DATE 8-27-81

BBC Brown Boveri Electric, Inc.

D L-11541 REV. 0

SH. NO. 1 of 1 | SCALE: HALF SCALE

NO.	REVISIONS	BY & DATE	CHKD.	APP.	NO.	REVISIONS	BY & DATE	CHKD.	APP.	NO.	REVISIONS	BY & DATE	CHKD.	APP.

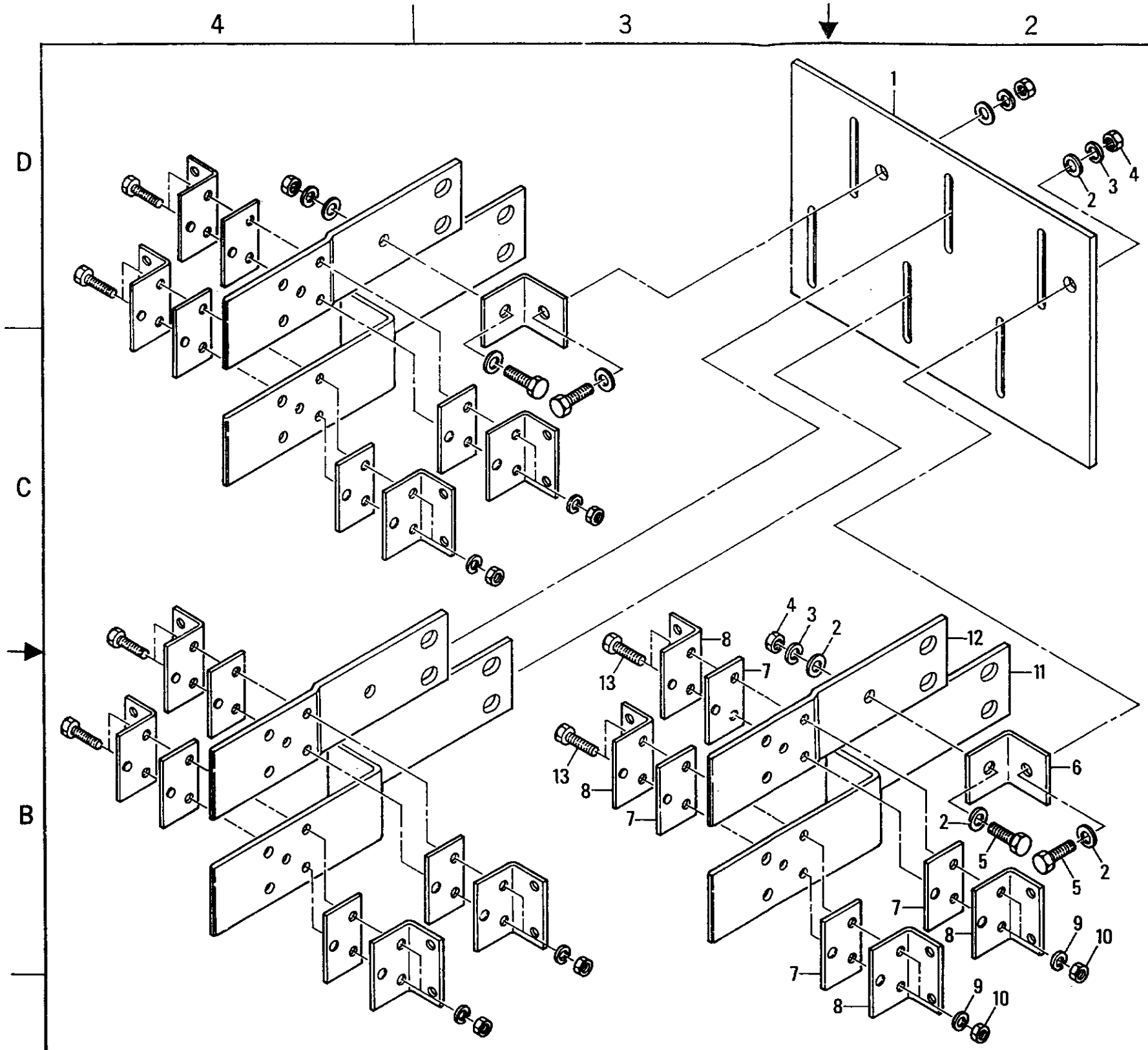

PARTS LIST

ITEM NO.	PART NO.	QTY.	DESCRIPTION
1	713843-A	1	SUPPORT (LEAD)
2	54500-H	8	FLAT WASHER (.375)
3	53103-H	4	LOCKWASHER (.375)
4	54400-H	4	NUT (.375)
5	54390-C5	4	SCREW, HX HD (.375 x 1.25 LG)
6	713842-A	2	CLIP (SUPPORT TO LEAD)
7	713327-A	2	SPACER
8	712830-A	2	ANGLE (LEAD SUPPORT)
9	53103-G	2	LOCKWASHER (.312)
10	54400-G	2	NUT (.312)
11	713801-A	3	LEAD (2.75 x 16.56 LG)
12	713800-A	3	LEAD (2.75 x 11.31 LG)
13	54390-B5	2	SCREW, HX HD (.312 x 1.25 LG)

NOTES:

1. QUANTITIES GIVEN FOR ITEM NO'S. 7, 8, 9, 10 & 13 ARE FOR EACH LEAD.

PRIMARY LEADS
(800 AMP FEEDER)

(T1) LK 8

CUST. P. O.	NEXT ASSM.	ITEM	TYPE	PROD.	CLASS
	L-11600				

EPL 712239-T1	BY R. Bogan DATE 9-3-81	CHD. DATE 11-12-81	APP. DATE 11-12-81

BBC BROWN BOVERI — Brown Boveri Electric, Inc. Manufacturer of I-T-E Electrical Power Equipment

C L-11569 REV. ○

SH. NO. 1 of 1 SCALE: REDUCED

THIS DRAWING IS THE PROPERTY OF BROWN BOVERI ELECTRIC INC. AND CONTAINS PROPRIETARY AND CONFIDENTIAL INFORMATION WHICH MUST NOT BE DUPLICATED, USED OR DISCLOSED OTHER THAN AS EXPRESSLY AUTHORIZED BY BROWN BOVERI ELECTRIC INC.

NO.	REVISIONS	BY & DATE	CHD.	APP.	NO.	REVISIONS	BY & DATE	CHD.	APP.	NO.	REVISIONS	BY & DATE	CHD.	APP.

PARTS LIST

ITEM NO.	PART NO.	QTY	DESCRIPTION
1	712625-K1	1	MOLDING (LK8 AND 16)
2	712486-A	2	SUPPORT (DRAWOUT BREAKER)
3	712396-A	2	ANGLE (BREAKER SUPPORT)
4	54343-H11	4	SCREW, RD HD (.375 X 1.12 LG.)
5	53103-H	8	LOCKWASHER (.375)
6	54400-H	8	NUT, HEX. (.375)
7	650351-B27	2	SPACER (.390 I.D. X 1.12 O.D.)
8	712490-A	4	WHEEL
9	714219-A	4	STUD (.375 X 2.00 LG.)
10	54400-6	2	NUT, HEX (.312)
11	53103-6	2	LOCKWASHER (.312 I.D.)
12	54500-6	2	WASHER (.312 I.D.)
13	714235-A	2	SCREW (SPECIAL)(.312 X 1.00 LG.)
14	712152-K1	1	MOLDING (LK 25, 32 AND 42)

NOTES:

1. LK8 AND 16 MOLDING SHOWN. FOR LK 25, 32 AND 42 MOLDING USE ITEM NO. 14.

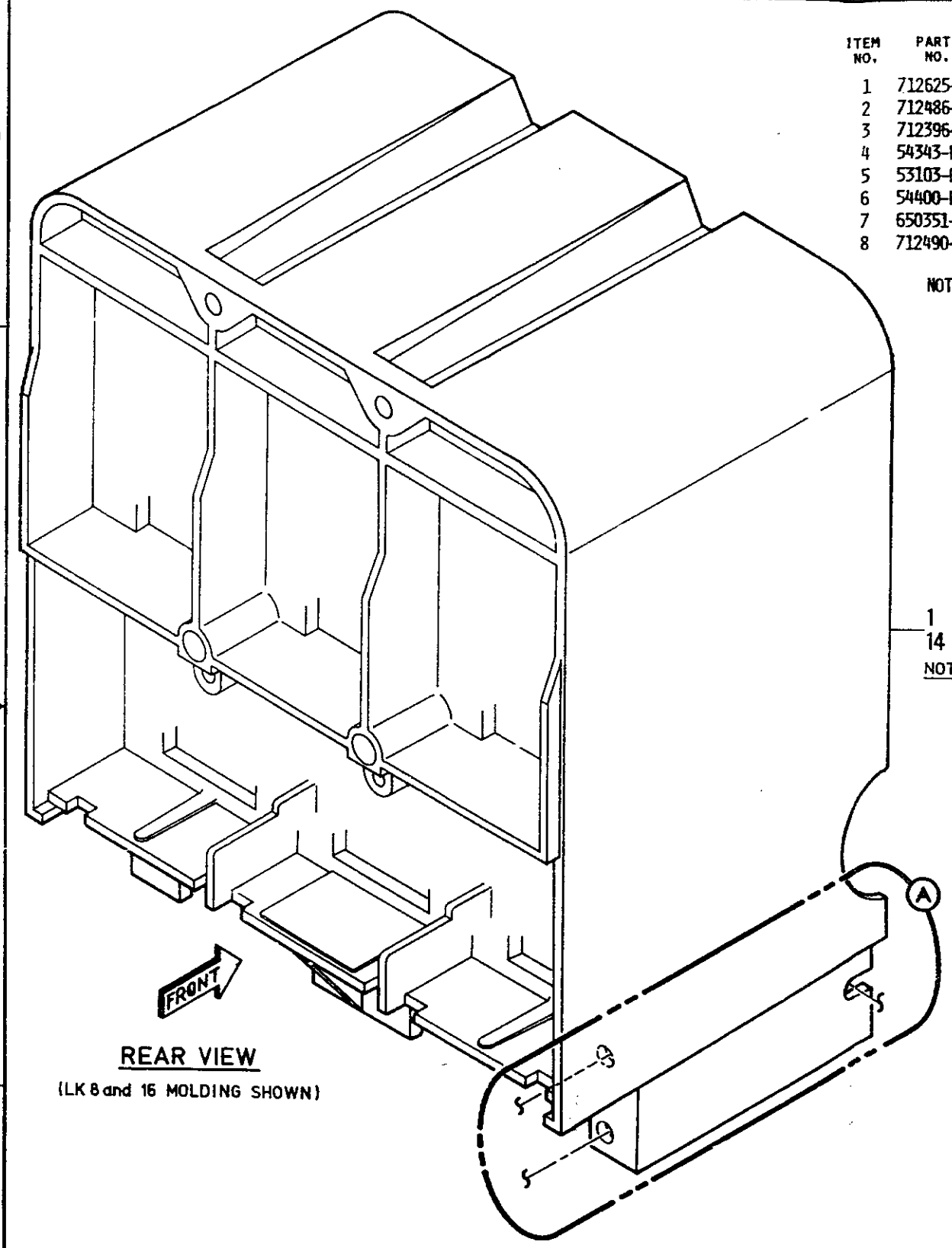

REAR VIEW

(LK 8 and 16 MOLDING SHOWN)

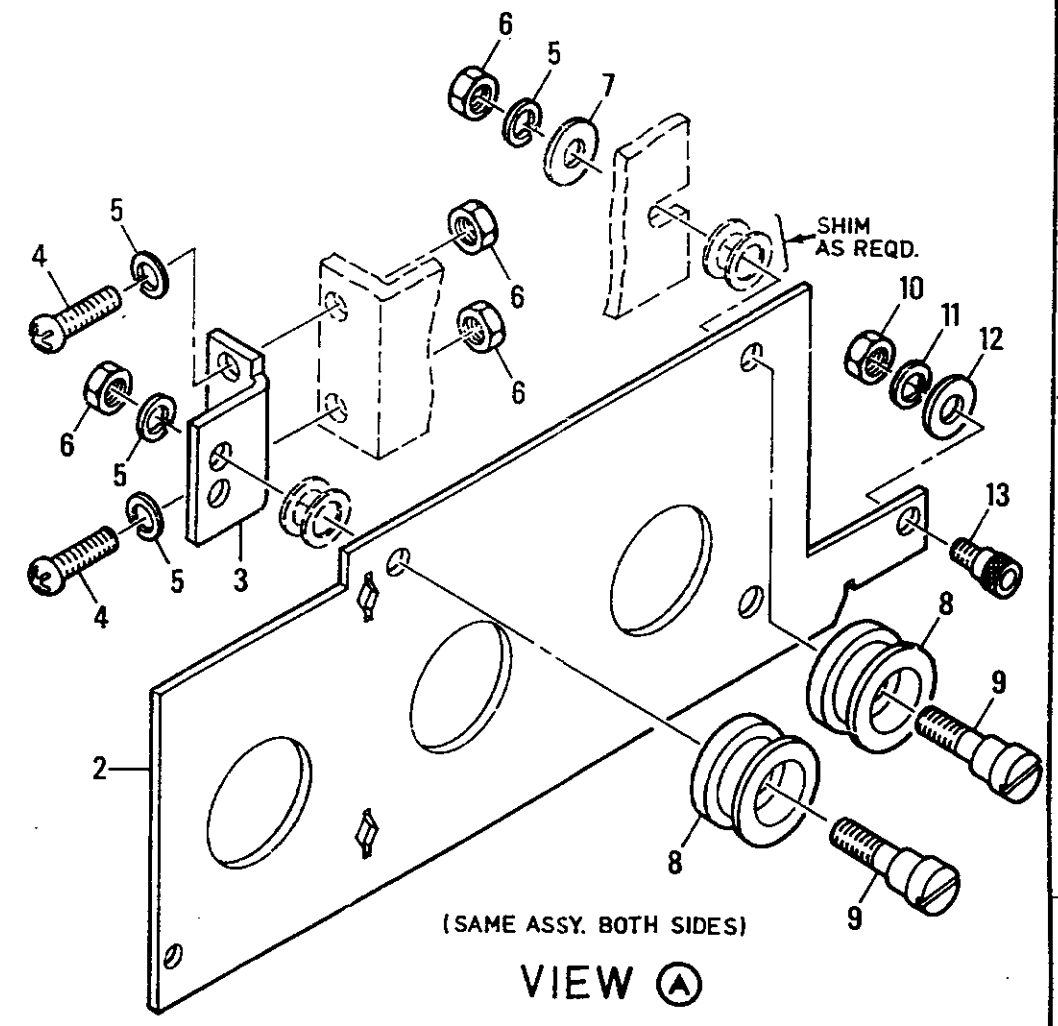

(SAME ASSY. BOTH SIDES)

VIEW (A)

STANDARD TOLERANCE INFO. ON DR. 3.016
TOLERANCES – UNLESS OTHERWISE SPECIFIED – 3 PL. DEC. ±

DIMENSIONS ARE IN INCHES
2 PL. DEC. ±

BASE MOLDING ASSY.
STAGE I

(T1, T2, T3, T4, T5)

LK 8, 16, 25, 32, 42

BBC BROWN BOVERI — Brown Boveri Electric, Inc.
Manufacturer of I-T-E Electrical Power Equipment

L-11575 — REV. 0

SHEET NO. 1 OF 1 — CONT. ON

REV. L-10861/10996 — BY R. BOYER — DATE 11-19-81 — CHD. — DATE 12-2-81 — APP. — DATE 12-2-81 — MICRO.

EPL 713909

Scale: HALF SIZE

THIS DRAWING IS THE PROPERTY OF BROWN-BOVERI ELECTRIC, INC. AND CONTAINS PROPRIETARY AND CONFIDENTIAL INFORMATION WHICH MUST NOT BE DUPLICATED, USED, OR DISCLOSED OTHER THAN AS EXPRESSLY AUTHORIZED BY BROWN-BOVERI ELECTRIC, INC.

NO.	REVISIONS	BY & DATE	NO.	REVISIONS	BY & DATE	NO.	REVISIONS	BY & DATE