Installation Instructions

MicroLogix™ 1000 Programmable Controllers

(Catalog Numbers 1761-L10BWA, -L10BWB, -L10BXB,
-L16AWA, -L16BWA, -L16BWB, -L16BBB, -L16NWA, -L16NWB,
-L20AWA-5A, -L20BWA-5A, -L20BWB-5A,
-L32AAA, -L32AWA, -L32BWA, -L32BWB, -L32BBB)

Inside ..... page

English Section 1
Section en français 21
Deutscher Abschnitt 41
Sezione italiana 61
Sección de español 81
Seção em Português 101
Wiring Diagrams, Input Voltage Ranges and Output Voltage Ranges 121

Publication 1761-IN001B-MU-P - May 2002

Important User Information

Because of the variety of uses for the products described in this publication, those responsible for the application and use of these products must satisfy themselves that all necessary steps have been taken to assure that each application and use meets all performance and safety requirements, including any applicable laws, regulations, codes and standards. In no event will Allen-Bradley be responsible or liable for indirect or consequential damage resulting from the use or application of these products.

Any illustrations, charts, sample programs, and layout examples shown in this publication are intended solely for purposes of example. Since there are many variables and requirements associated with any particular installation, Allen-Bradley does not assume responsibility or liability (to include intellectual property liability) for actual use based upon the examples shown in this publication.

Allen-Bradley publication SGI-1.1, *Safety Guidelines for the Application, Installation and Maintenance of Solid-State Control* (available from your local Allen-Bradley office), describes some important differences between solid-state equipment and electromechanical devices that should be taken into consideration when applying products such as those described in this publication.

Reproduction of the contents of this copyrighted publication, in whole or part, without written permission of Rockwell Automation, is prohibited.

Throughout this publication, notes may be used to make you aware of safety considerations. The following annotations and their accompanying statements help you to identify a potential hazard, avoid a potential hazard, and recognize the consequences of a potential hazard:

WARNING

Identifies information about practices or circumstances that can cause an explosion in a hazardous environment, which may lead to personal injury or death, property damage, or economic loss.

ATTENTION

Identifies information about practices or circumstances that can lead to personal injury or death, property damage, or economic loss.

IMPORTANT

Identifies information that is critical for successful application and understanding of the product.

Installation Instructions

English Section

MicroLogix™ 1000 Programmable Controllers

(Catalog Numbers 1761-L10BWA, -L10BWB, -L10BXB,
-L16AWA, -L16BWA, -L16BWB, -L16BBB, -L16NWA, -L16NWB,
-L20AWA-5A, -L20BWA-5A, -L20BWB-5A,
-L32AAA, -L32AWA, -L32BWA, -L32BWB, -L32BBB)

Overview

Install your controller using these installation instructions. The only tools you require are a Flat head or Phillips head screwdriver and drill.

Catalog Number Detail

The catalog number for the controller is composed of the following:

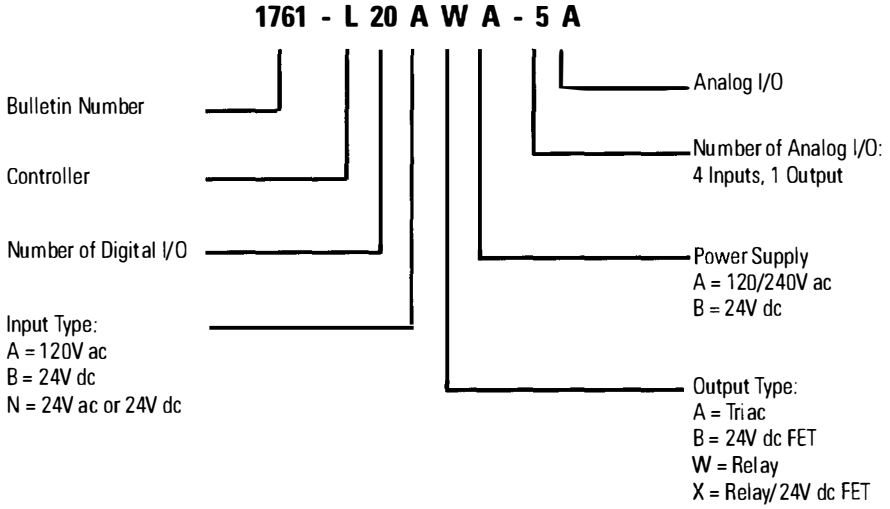

Publication 1761-IN001B-MU-P - May 2002

For More Information

Related Publications

For	Refer to this Document	Pub. No.
A description on how to use your MicroLogix 1000 programmable controllers. This manual also contains status file data and instruction set information.	MicroLogix 1000 Programmable Controllers User Manual	1761-6.3
A procedural manual for technical personnel who use the Allen-Bradley Hand-Held Programmer (HHP) to monitor and develop control logic programs for the MicroLogix 1000 controller.	MicroLogix 1000 with Hand-Held Programmer (HHP) User Manual	1761-6.2
More information on proper wiring and grounding techniques.	Industrial Automation Wiring and Grounding Guidelines	1770-4.1
The procedures necessary to install and connect the AIC+ and DNI.	Advanced Interface Converter (AIC+) and DeviceNet Interface (DNI) Installation Instructions	1761-5.11
A more detailed description on how to install and use your AIC+ Advanced Interface Converter.	AIC+ Advanced Interface Converter User Manual	1761-6.4
A more detailed description on how to install and use your DeviceNet Interface.	DeviceNet Interface User Manual	1761-6.5
A more detailed description on how to install and use your Ethernet Interface.	Ethernet Interface User Manual	1761-UM006

If you would like a manual, you can:

- download a free electronic version from the internet: **www.theautomationbookstore.com** or **www.ab.com/micrologix**
- purchase a printed manual by:
  - contacting your local distributor or Rockwell Automation representative
  - visiting **www.theautomationbookstore.com** and placing your order
  - calling **1.800.963.9548** (USA/Canada) or **001.330.725.1574** (Outside USA/Canada)

Safety Considerations

This equipment is suitable for use in Class I, Division 2, Groups A, B, C, D or non-hazardous locations only (when product or packing is marked).

WARNING

Explosion Hazard:

- Substitution of components may impair suitability for Class I, Division 2.
- Do not replace components or disconnect equipment unless power has been switched off and the area is known to be non-hazardous.
- Do not connect or disconnect connectors while circuit is live unless area is known to be non-hazardous.
- This product must be installed in an enclosure. All cables connected to the product must remain in the enclosure or be protected by conduit or other means.

Use only the following communication cables in Class I, Division 2, Hazardous Locations.

Environment Classification	Communication Cable
Class I, Division 2, Hazardous Environment	1761-CBL-PM02 Series C
	1761-CBL-HM02 Series C
	1761-CBL-AM00 Series C
	1761-CBL-AP00 Series C
	2707-NC8 Series B
	2707-NC9 Series B
	2707-NC10 Series B
	2707-NC11 Series B

Physical Dimensions

Controller: 1761-	Length: mm (in.)	Depth: mm (in.)	Height: mm (in.)
L10BWA	120 (4.72)	73 (2.87)	80 (3.15)
L16BWA			
L16NWA			
L16AWA	133 (5.24)		
L20AWA-5A	200 (7.87)		
L20BWA-5A			
L32AWA			
L32BWA			
L32AAA			
L10BWB	120 (4.72)	40 (1.57)	
L10BXB			
L16BBB			
L16BWB			
L16NWB			
L20BWB-5A	200 (7.87)		
L32BBB			
L32BWB			

Controller Spacing

The following figure shows the recommended *minimum* spacing for the controller.

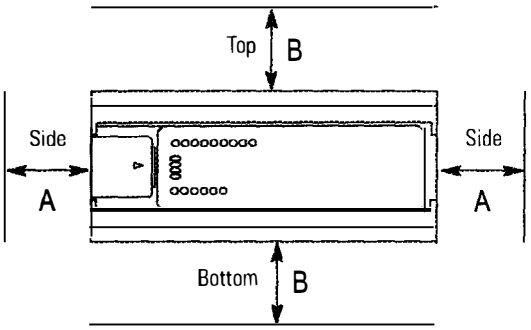

A. Greater than or equal to 50.8 mm (2 in.)
B. Greater than or equal to 50.8 mm (2 in.)

Note: The controller is shown horizontally mounted.

Mounting Your Controller Horizontally

The controller should be mounted horizontally within an enclosure using either the DIN rail or mounting screw option. Use the mounting template from the front of this document to help you space and mount the controller properly.

ATTENTION

Be careful of metal chips when drilling mounting holes for your controller. Drilled fragments that fall into the controller could cause damage. Do not drill holes above a mounted controller if the protective wrap is removed.

Using a DIN Rail

To install your controller on the DIN rail:

1. Mount your DIN rail. (Make sure that the placement of the controller on the DIN rail meets the recommended spacing requirements. Refer to the mounting template from the back of this document.)
2. Hook the top slot over the DIN rail.
3. While pressing the controller against the rail, snap the controller into position.
4. Leave the protective wrap attached until you are finished wiring the controller.

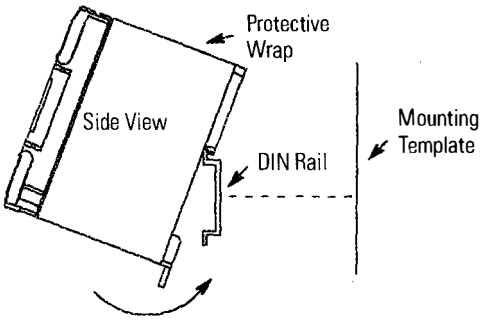

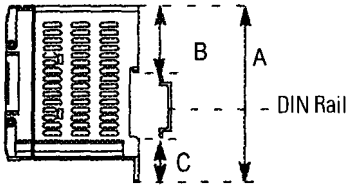

Call-out	Dimension
A	84 mm (3.3 in.)
B	33 mm (1.3 in.) maximum
C	16 mm (0.63 in.)

To remove your controller from the DIN rail:

1. Place a screwdriver in the DIN rail latch at the bottom of the controller.
2. Holding the controller, pry downward on the latch until the controller is released from the DIN rail.

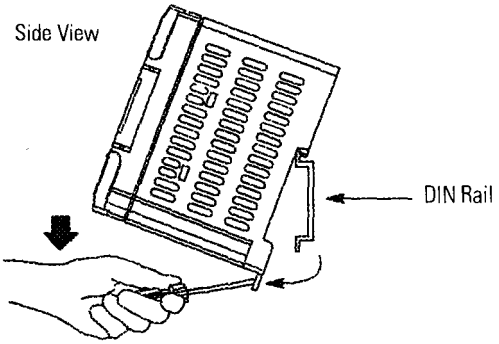

Using Mounting Screws

To install your controller using mounting screws:

1. Remove the mounting template from the back of this document.
2. Secure the template to the mounting surface. (Make sure your controller is spaced properly.)
3. Drill holes through the template.
4. Remove the mounting template.
5. Mount the controller.
6. Leave the protective wrap attached until you are finished wiring the controller.

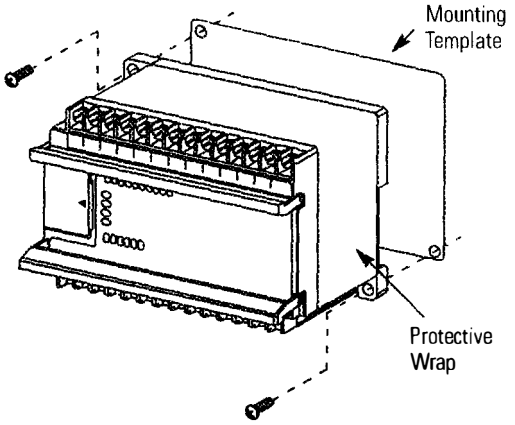

Mounting Your Controller Vertically

Your controller can also be mounted vertically within an enclosure using mounting screws or a DIN rail. To insure the stability of your controller, we recommend using mounting screws. For additional information, refer to the previous section.

To insure the controller's reliability, the following environmental specifications must not be exceeded.

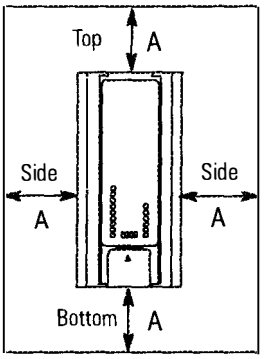

A. Greater than or equal to 50.8 mm (2 in.).

Description:	Specification:
Operating Temperature	0°C to +40°C (+32°F to +113°F)(1)
Operating Shock (Panel mounted)	9.0g peak acceleration (11 ± 1 ms duration) 3 times each direction, each axis
Operating Shock (DIN rail mounted)	7.0g peak acceleration (11 ± 1 ms duration) 3 times each direction, each axis

(1) DC input voltage derated linearly from +30°C (30V to 26.4V).

Note: When mounting your controller vertically, the nameplate should be facing downward.

Wiring Your Controller

Wire Type:	Wire Size: (2 wire maximum per terminal screw)
Solid	#14 to #22 AWG
Stranded	#16 to #22 AWG

IMPORTANT The diameter of the terminal screw head is 5.5 mm (0.220 in.). The input and output terminals of the MicroLogix 1000 controller are designed for the following spade lugs:

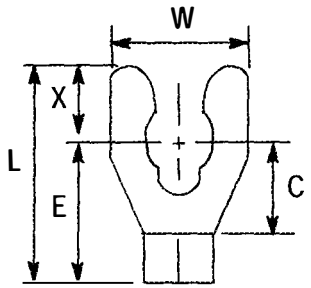

Call-out	Dimension
C	6.35 mm (0.250 in.)
E	10.95 mm (0.431 in.) maximum
L	14.63 mm (0.576 in.)
W	6.35 (0.250 in.)
X	3.56 mm (0.140 in.)
C + X	9.91 mm (0.390 in.) maximum

We recommend using either of these AMP (or equal) spade lugs: part number 53120-1, if using 22-16 AWG, or part number 53123-1, if using 16-14 AWG.

IMPORTANT If you use wires without lugs, make sure the wires are securely captured by the pressure plate. This is particularly important at the four end terminal positions where the pressure plate does not touch the outside wall of the controller.

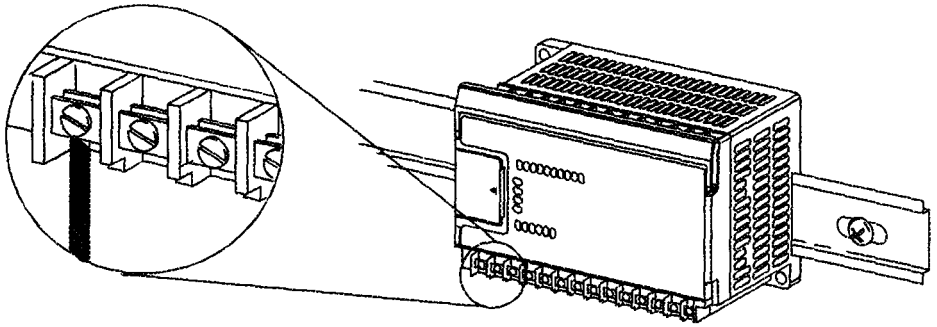

IMPORTANT Be careful when stripping wires. Wire fragments that fall into the controller could cause damage. Remove the protective wrap *after* wiring your controller. Failure to remove the wrap may cause the controller to overheat.

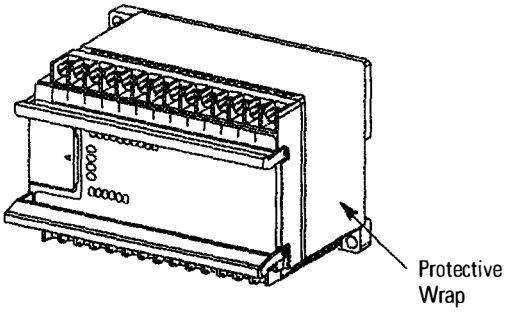

IMPORTANT ⏚ This symbol denotes a functional earth ground terminal which provides a low impedance path between electrical circuits and earth for non-safety purposes, such as noise immunity improvement.

Grounding Your Controller

In solid-state control systems, grounding helps limit the effects of noise due to electromagnetic interference (EMI). Run the ground connection from the ground screw of the controller (third screw from left on output terminal rung) to the ground bus. Use the heaviest wire gauge listed for wiring your controller.

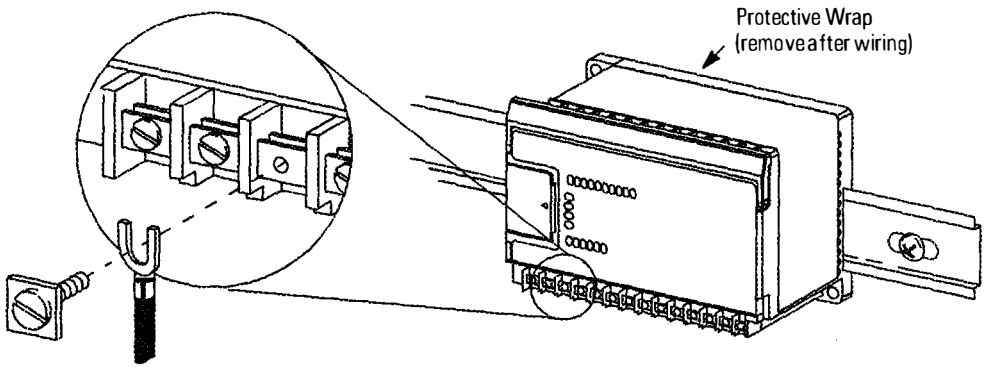

ATTENTION

All devices connected to the user 24V power supply or to the RS-232 channel must be referenced to chassis ground or floating. Failure to follow this procedure may result in property damage or personal injury.

Chassis ground, user 24V ground, and the RS-232 ground are internally connected. You must connect the chassis ground terminal screw to chassis ground prior to connecting any devices.

On the 1761-L10BWB, -L10BXB, -L16BWB, -L16BBB, -L16NWB, -L20BWB-5A, -L32BBB, and -L32BWB controllers, the ground associated with the user supplied 24V DC input power and chassis ground are internally connected.

You must also provide an acceptable grounding path for each device in your application. For more information on proper grounding guidelines, see the *Industrial Automation Wiring and Grounding Guidelines,* (publication 1770-4.1).

Surge Suppression

Inductive load devices such as motor starters and solenoids require the use of some type of surge suppression to protect the controller output contacts. Switching inductive loads without surge suppression can *significantly* reduce the life expectancy of relay contacts. By adding a suppression device directly across the coil of inductive devices, you prolong the life of the output circuits. You also reduce the effects of radiated voltage transients and prevent electrical noise from radiating into system wiring and facility.

The following diagram shows an output with a suppression device. We recommend that you locate the suppression device as close as possible to the load device.

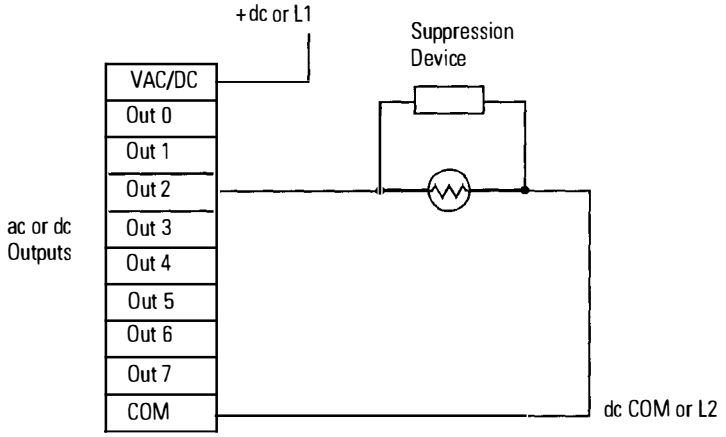

If you connect a micro controller FET output to an inductive load, we recommend that you use an 1N4004 diode for surge suppression, as shown in the illustration on page 11.

Suitable surge suppression methods for inductive load devices include a varistor, an RC network, or, for dc loads, a diode. These components must be appropriately rated to suppress the switching transient characteristic of the particular inductive device. See the table on page 12 for recommended suppressors.

As the following diagram illustrates, these surge suppression circuits connect directly across the load device. This reduces arcing and damage of the output contacts. (High transients can cause arcing that occurs when switching off an inductive device.)

Surge Suppression for Inductive ac Load Devices

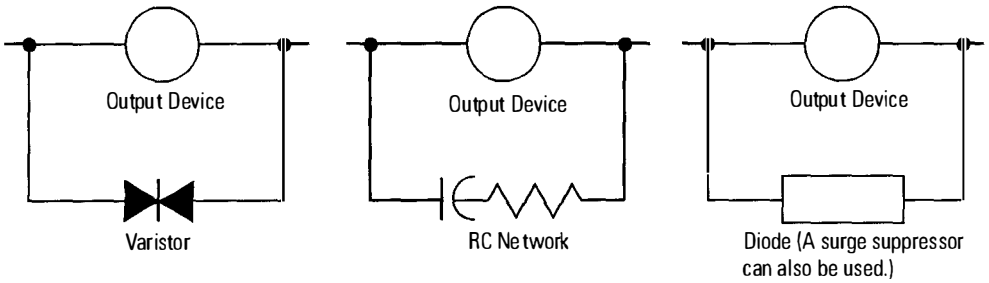

If you connect a micro controller triac output to control an inductive load, we recommend that you use varistors to suppress noise. Choose a varistor that is appropriate for the application. The suppressors we recommend for triac outputs when switching 120V ac inductive loads are a Harris MOV, part number V175 LA10A, or an Allen-Bradley MOV, catalog number 599-K04 or 599-KA04. Consult the varistor manufacturer's data sheet when selecting a varistor for your application.

For inductive dc load devices, a diode is suitable. A 1N4004 diode is acceptable for most applications. A surge suppressor can also be used. See the table on page 12 for recommended suppressors.

Recommended Surge Suppressors

We recommend the Allen-Bradley surge suppressors shown in the following table for use with Allen-Bradley relays, contactors, and starters.

Device	Coil Voltage	Suppressor Catalog Number
Bulletin 509 Motor Starter Bulletin 509 Motor Starter	120V ac 240V ac	599-K04(1) 599-KA04(1)
Bulletin 100 Contactor Bulletin 100 Contactor	120V ac 240V ac	199-FSMA1(2) 199-FSMA2(2)
Bulletin 709 Motor Starter	120V ac	1401-N10
Bulletin 700 Type R, RM Relays	ac coil	None Required
Bulletin 700 Type R Relay Bulletin 700 Type RM Relay	12V dc 12V dc	199-FSMA9
Bulletin 700 Type R Relay Bulletin 700 Type RM Relay	24V dc 24V dc	199-FSMA9
Bulletin 700 Type R Relay Bulletin 700 Type RM Relay	48V dc 48V dc	199-FSMA9
Bulletin 700 Type R Relay Bulletin 700 Type RM Relay	115-125V dc 115-125V dc	199-FSMA10
Bulletin 700 Type R Relay Bulletin 700 Type RM Relay	230-250V dc 230-250V dc	199-FSMA11
Bulletin 700 Type N, P, or PK Relay	150V max, ac or DC	700-N24(2)
Miscellaneous electromagnetic devices limited to 35 sealed VA	150V max, ac or DC	700-N24(2)

(1) Varistor – Not recommended for use on relay outputs.

(2) RC Type – Do not use with triac outputs.

Sinking and Sourcing

Any MicroLogix 1000 DC input can be configured as sinking or sourcing depending on how the DC COM terminal is wired.

Mode:	Definition:
Sinking	The input energizes when high-level voltage is applied to the input terminal (active high). Connect the power supply VDC (-) to the corresponding DC COM terminal.
Sourcing	The input energizes when low-level voltage is applied to the input terminal (active low). Connect the power supply VDC (+) to the corresponding DC COM terminal.

Sinking and Sourcing Wiring Examples

1761-L32BWA

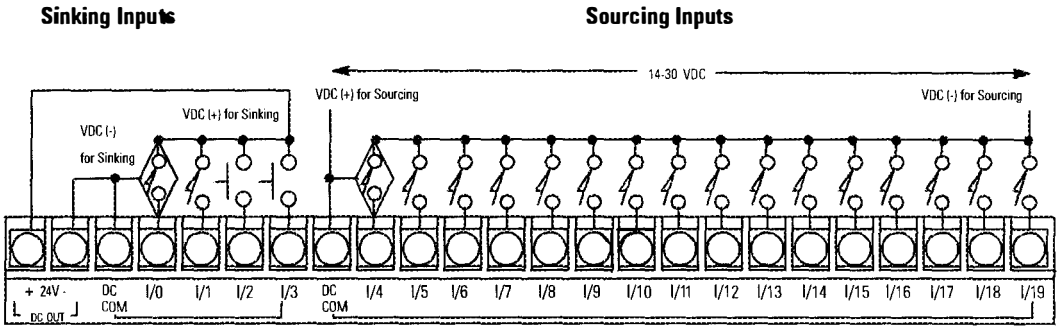

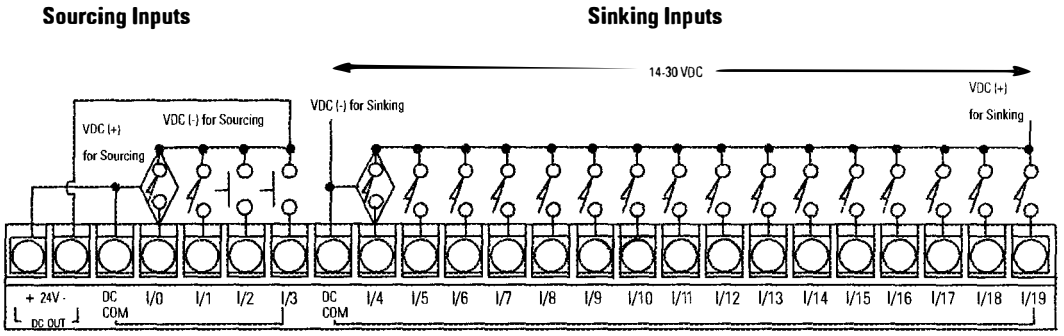

Wiring Your Analog Channels

Analog input circuits can monitor current *and* voltage signals and convert them to serial digital data. The analog output can support either a voltage *or* a current function as shown in the following illustration.

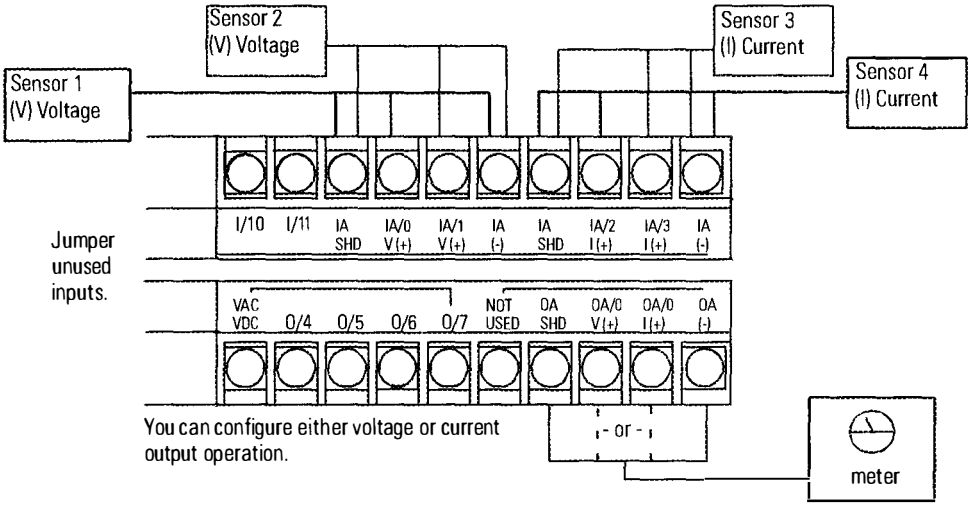

The controller does not provide loop power for analog inputs. Use a power supply that matches the transmitter specifications as shown below.

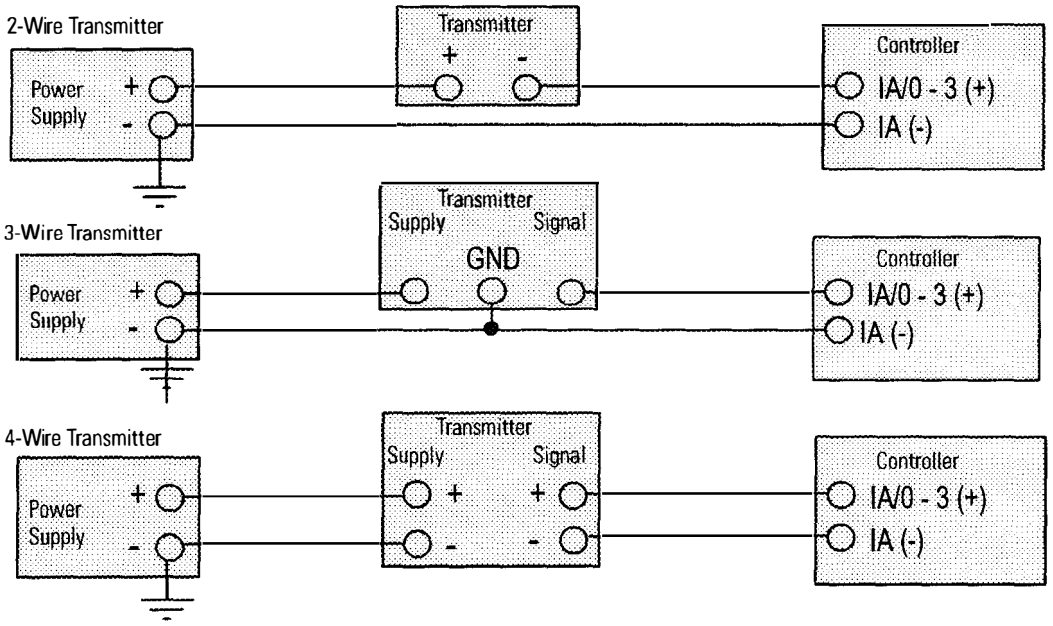

Minimizing Electrical Noise on Analog Controllers

Inputs on analog controllers employ digital high-frequency filters that significantly reduce the effects of electrical noise on input signals. However, because of the variety of applications and environments where analog controllers are installed and operated, it is impossible to ensure that all environmental noise will be removed by the input filters.

Several specific steps can be taken to help reduce the effects of environmental noise on analog signals:

- install the MicroLogix 1000 system in a properly rated (i.e., NEMA) enclosure. Make sure that the MicroLogix 1000 system is properly grounded.
- use Belden cable #8761 for wiring the analog channels, making sure that the drain wire and foil shield are properly earth grounded.
- route the Belden cable separate from any ac wiring. Additional noise immunity can be obtained by routing the cables in grounded conduit.

Grounding Your Analog Cable

Use shielded communication cable (Belden #8761). The Belden cable has two signal wires (black and clear), one drain wire, and a foil shield. The drain wire and foil shield must be grounded at one end of the cable. *Do not* ground the drain wire and foil shield at *both* ends of the cable.

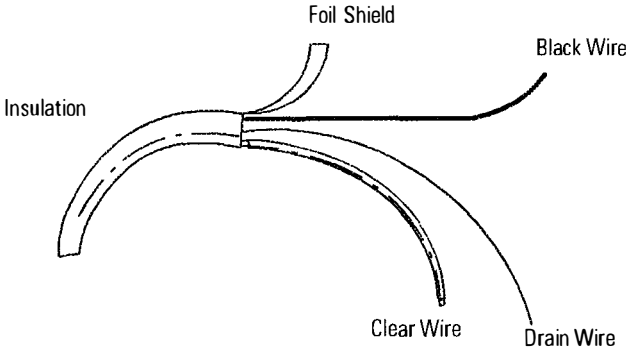

Specifications

Environmental Specifications (all MicroLogix controllers)

Description	Specification
Operating Temperature	0°C to +55°C (+32°F to +131°F) for horizontal mounting 0°C to +40°C (+32°F to +104°F) for vertical mounting(1)
Storage Temperature	-40°C to +85°C (-40°F to +185°F)
Operating Humidity	5 to 95% non-condensing
Agency Certification (when product or packaging is marked)	• C-UL Class I, Division 2 Groups A,B,C,D certified • UL listed (Class I, Division 2 Groups A,B,C,D certified) • CE/C-Tick compliant for all applicable directives

(1) DC input voltage derated linearly from +30°C (30V to 26.4V).

General Specifications

Description:		Specification: 1761-L								
		16AWA	32AWA	10BWA	16BWA 16NWA	32BWA	32AAA	10BXB 16BBB	10BWB 16BWB 16NWB	32BWB 32BBB
Memory Size and Type		1 K EEPROM (approximately 737 instruction words: 437 data words)								
Power Supply Voltage		85-264V ac, 47-63 Hz						20.4-26.4V dc		
Power Supply Usage	120V ac	15 VA	19 VA	24 VA	26 VA	29 VA	16 VA	Not Applicable		
	240V ac	21 VA	25 VA	32 VA	33 VA	36 VA	22 VA			
	24V dc	Not Applicable						5W		7W
Power Supply Max Inrush Current		30A for 8 ms						30A for 4 ms		
24V dc Sensor Power (V dc at mA)		Not Applicable		200 mA			Not Applicable			
Max Capacitive Load (User 24V dc)				200 µF						
Power Cycles		50,000 minimum								
Vibration		Operating: 5 Hz to 2k Hz, 0.381 mm (0.015 in.) peak to peak/2.5g panel mounted,(1) 1hr per axis Non-operating: 5 Hz to 2k Hz, 0.762 mm (0.030 in.) peak to peak/5g, 1hr per axis								
Shock(2)		Operating: 10g peak acceleration (7.5g DIN rail mounted)(3) (11±1 ms duration) 3 times each direction, each axis Non-operating: 20g peak acceleration (11±1 ms duration), 3 times each direction, each axis								
Terminal Screw Torque		0.9 N-m maximum (8.0 in.-lbs)								
Electrostatic Discharge		EN 61000-2 at 8K V								
Radiated Susceptibility		EN 61000-3 at 10 V/m, 27 MHz - 1000 MHz; 3V/m, 87 MHz - 108 MHz, 174 MHz - 230 MHz, and 470 MHz - 790 MHz								
Fast Transient		EN 61000-4 at 2K V Power Supply, I/O; 1K V Comms								
Isolation		1500V ac								

(1) DIN rail mounted controller is 1g.

(2) Refer to page 6 for vertical mounting specifications.

(3) Relays are derated an additional 2.5g on 32 pt. controllers.

Analog General Specifications

Description:	Specification: 1761-L		
	20AWA-5A	20BWA-5A	20BWB-5A
Memory Size and Type	1 K EEPROM (approximately 737 instruction words: 437 data words)		
Power Supply Voltage	85-264V ac, 47-63 Hz		20.4-26.4V dc

Description:		Specification: 1761-L		
		20AWA-5A	20BWA-5A	20BWB-5A
Power Supply Usage	120V ac	20 VA	30 VA	Not Applicable
	240V ac	27 VA	38 VA	
	24V dc	Not Applicable		10W
24V dc Sensor Power (V dc at mA)		Not Applicable	200 mA	Not Applicable
Max Capacitive Load (User 24V dc)			200 µF	
Power Cycles		50,000 minimum		
Vibration		Operating: 5 Hz to 2k Hz, 0.381 mm (0.015 in.) peak to peak/2.5g panel mounted,(1) 1hr per axis Non-operating: 5 Hz to 2k Hz, 0.762 mm (0.030 in.) peak to peak/5g, 1hr per axis		
Shock(2)		Operating: 10g peak acceleration (7.5g DIN rail mounted)(3) (11±1 ms duration) 3 times each direction, each axis Non-operating: 20g peak acceleration (11±1 ms duration), 3 times each direction, each axis		
Terminal Screw Torque		0.9 N-m maximum (8.0 in.-lbs)		
Electrostatic Discharge		EN 61000-2 at 8K V Discrete I/O 4K V Contact, 8K V Air for Analog I/O		
Radiated Susceptibility		EN 61000-3 at 10 V/m, 27 MHz - 1000 MHz 3 V/m, 87 MHz - 108 MHz, 174 MHz - 230 MHz, and 470 MHz - 790 MHz		
Fast Transient		EN 61000-4 at 2K V Power Supply, I/O; 1K V Comms		
Isolation		1500V ac		

(1) DIN rail mounted controller is 1g.

(2) Refer to page 6 for vertical mounting specifications.

(3) Relays are derated an additional 2.5g on 20 pt. controllers.

General Input Specifications

Description	Specification	
	100-120V ac Controllers	24V dc Controllers
Voltage Range	79 to 132V ac, 47 to 63 Hz	14 to 30V dc
On Voltage	79V ac min. 132V ac max.	14V dc min. 24V dc nominal 26.4V dc max. at +55°C (+131°F) 30.0V dc max. at +30°C (+86°F)
Off Voltage	20V ac	5V dc
On Current	5.0 mA min. at 79V ac 47 Hz 12.0 mA nominal at 120V ac 60 Hz 16.0 mA max. at 132V ac 63 Hz	2.5 mA min. at 14V dc 8.0 mA nominal at 24V dc 12.0 mA max. at 30V dc
Off Current	2.5 mA max.	1.5 mA max.
Nominal Impedance	12K ohms at 50 Hz 10K ohms at 60 Hz	3K ohms
Inrush Maximum	250 mA max.(1)	Not Applicable

(1) To reduce the inrush maximum to 35 mA, apply a 6.8K ohm, 5W resistor in series with the input. The on-state voltage increases to 92V ac as a result

AC/DC Input Specifications for 1761-L16NWA and 1761-L16NWB

Specification[1]		AC Excitation[2]	DC Excitation
On State Voltage	Minimum	18V ac	14V dc
	Nominal	24V ac	24V dc
	Maximum	26.4V ac at 55°C (131°F) 30V ac at 30°C (86°F)	26.4V dc at 55°C (131°F) 30V dc at 30°C (86°F)
On State Current	Minimum	3.0 mA at 18V ac	2.5 mA at 14V dc
	Nominal	8.0 mA at 24V ac	8.0 mA at 24V dc
	Maximum	12 mA at 30V ac	12 mA at 30V dc
Off State Voltage	Minimum	0.0V ac	0.0V dc
	Maximum	3.0V ac	5.0V dc
Off State Current	Minimum	1.0 mA	1.5 mA
Frequency	Nominal	50/60 Hz	see Turn On Time/Turn Off Time
	Range	47 to 63 Hz	
Turn On Time[3]	Minimum	2 ms	2 ms
	Maximum	20 ms	20 ms
Turn Off Time[3]	Minimum	10 ms	10 ms
	Maximum	20 ms	20 ms

(1) Input circuits may be operated ac or dc on a group basis only.

(2) All ac specifications are sinusoidal RMS values.

(3) Turn On and Turn Off Times are not adjustable.

Analog Input Specifications

Description	Specification
Voltage Input Range	-10.5 to +10.5V dc - 1LSB
Current Input Range	-21 to +21 mA - 1LSB
Type of Data	16-bit signed integer
Input Coding -21 to +21 mA - 1LSB, -10.5 to +10.5V dc - 1 LSB	-32,768 to +32,767
Voltage Input Impedance	210KΩ
Current Input Impedance	160Ω
Input Resolution[1]	16 bit
Non-linearity	0.002%
Overall Accuracy 0°C to +55°C	±.0.7% of full scale
Overall Accuracy Drift 0°C to +55°C (max.)	±0.176%
Overall Error at +25°C (+77°F) (max.)	±0.525%
Voltage Input Overvoltage Protection	24V dc
Current Input Overcurrent Protection	±50 mA
Input to Output Isolation	30V rated working/500V isolation
Field Wiring to Logic Isolation	

(1) The analog input update rate and input resolution are a function of the input filter selection.

Analog Input Update Rates

Programmable Filter Characteristics				
1st Notch Freq (Hz)	**Filter Bandwidth (-3 dB Freq Hz)**	**Update Time (mSec)(1)**	**Settling Time (mSec)(1)**	**Resolution (Bits)**
10	2.62	100.00	400.00	16
50	13.10	20.00	80.00	16
60(2)	15.72	16.67	66.67	16
250	65.50	4.00	16.00	15

(1) The total update time for each channel is a combination of the Update Time and the Settling Time. When more than one analog input channel is enabled, the maximum update for each channel is equal to one ladder scan time plus the channel's Update Time plus Settling Time. When only one analog input channel is enabled, the maximum update for the channel is equal to the Update Time plus one ladder scan time for all except the first update after Going to Run (GTR). The first update time is increased by the Settling Time.

(2) 60 Hz is the default setting.

General Output Specifications

Type	Relay	MOSFET	Triac
Voltage	See Wiring Diagrams, p. 121.		
Max Load Current	See Relay Contact Ratings on page 20.	1.0A per point at +55° C (+131° F) 1.5A per point at +30° C (+86° F)	0.5A per point at +55° C (131° F) 1.0A per point at +30° C (86° F)
Min Load Current	10.0 mA	1 mA	10.0 mA
Current per Controller	1440 VA	3A for L16BBB 6A for L32BBB	1440 VA
Current per Common	8.0A	3A for L16BBB 6A for L32BBB	Not Applicable
Max Off State Leakage Current	0 mA	1 mA	2 mA at 132V ac 4.5 mA at 264V ac
Off to On Response	10 ms max.	0.1 ms	8.8 ms at 60 Hz 10.6 ms at 50 Hz
On to Off Response	10 ms max.	1 ms	11.0 ms
Surge Current per Point	Not Applicable	4A for 10 ms(1)	10A for 25 ms(1)

(1) Repeatability is once every 2 seconds at +55° C (+131° F).

Relay Contact Rating Table

Maximum Volts	Amperes		Amperes Continuous	Voltamperes	
	Make	Break		Make	Break
240V ac	7.5A	0.75A	2.5A	1800 VA	180 VA
120V ac	15A	1.5A			
125V dc	0.22A(1)		1.0A	28 VA	
24V dc	1.2A(1)		2.0A		

(1) For dc voltage applications, the make/break ampere rating for relay contacts can be determined by dividing 28 VA by the applied dc voltage. For example, 28 VA ÷ 48V dc = 0.58A. For dc voltage applications less than 48V, the make/break ratings for relay contacts cannot exceed 2A. For dc voltage applications greater than 48V, the make/break ratings for relay contacts cannot exceed 1A.

Analog Output Specifications

Description	Specification
Voltage Output Range	0 to 10V dc -1LSB
Current Output Range	4 to 20 mA - 1LSB
Type of Data	16-bit signed integer
Non-linearity	0.02%
Step Response	2.5 ms (at 95%)
Load Range - Voltage Output	1K Ω to ∞Ω
Load Range - Current Output	0 to 500 Ω
Output Coding 4 to 20 mA - 1 LSB, 0 to 10V dc - 1LSB	0 to 32,767
Voltage Output Miswiring	can withstand short circuit
Current Output Miswiring	can withstand short circuit
Output Resolution	15 bit
Analog Output Settling Time	3 msec (maximum)
Overall Accuracy 0°C to +55°C	±1.0% of full scale
Overall Accuracy Drift 0°C to +55°C (max.)	±0.28%
Overall Error at +25°C (+77°F) (max.)	0.2%
Field Wiring to Logic Isolation	30V rated working/500V isolation

Wiring Diagrams, Input Voltage Ranges and Output Voltage Ranges

1761-L16AWA Wiring Diagram

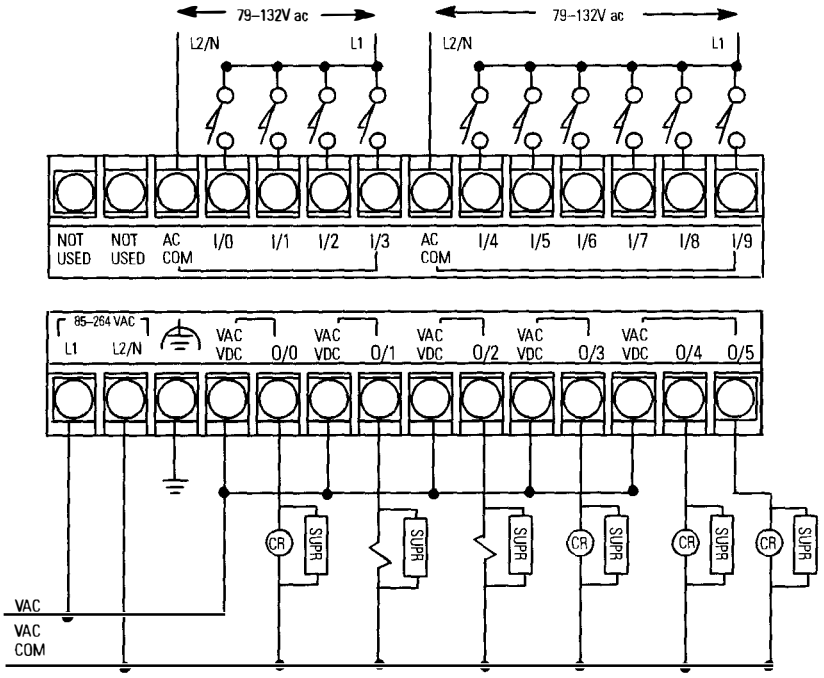

1761-L16AWA Input Voltage Range

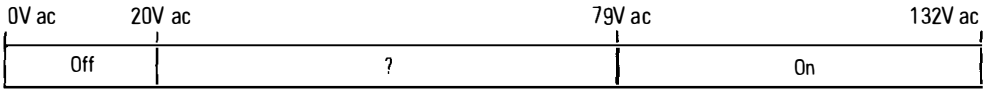

1761-L16AWA Output Voltage Range

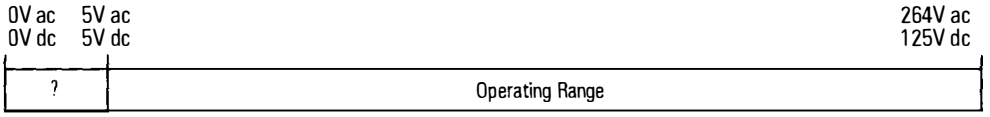

1761-L32AWA Wiring Diagram

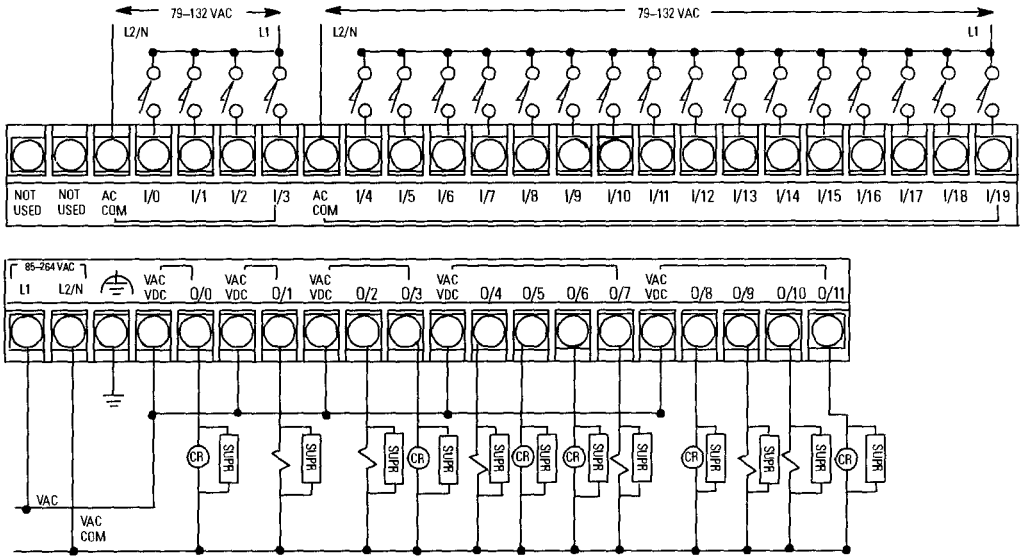

1761-L32AWA Input Voltage Range

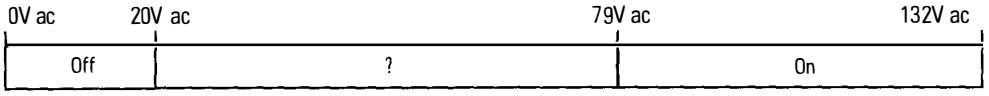

1761-L32AWA Output Voltage Range

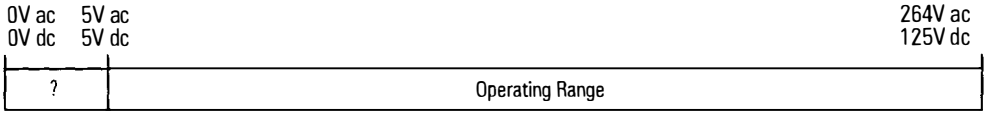

1761-L10BWA Wiring Diagram (Sinking Input Configuration)

Note: See page 13 for additional input configuration options.

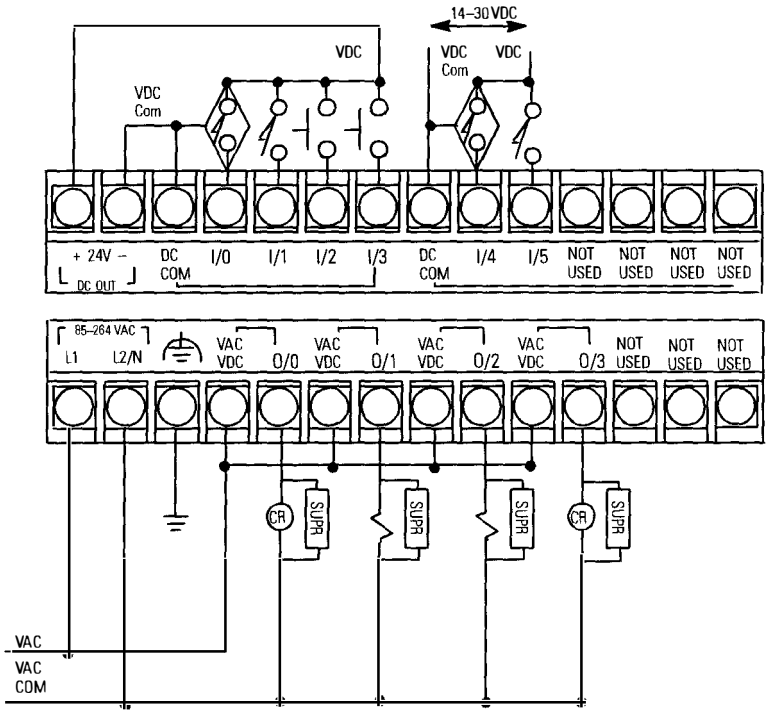

1761-L10BWA Input Voltage Range

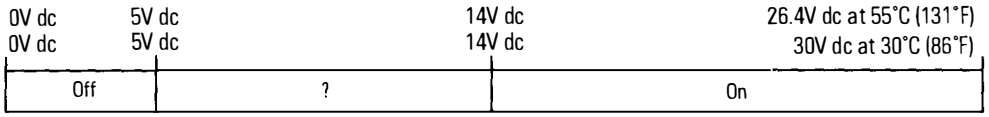

1761-L10BWA Output Voltage Range

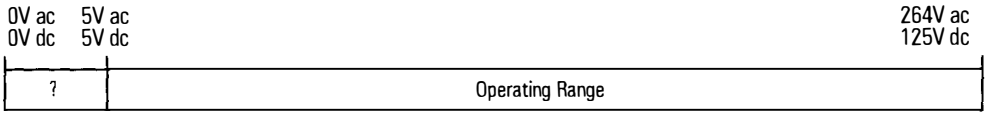

1761-L16BWA Wiring Diagram (Sinking Input Configuration)

Note: See page 13 for additional input configuration options.

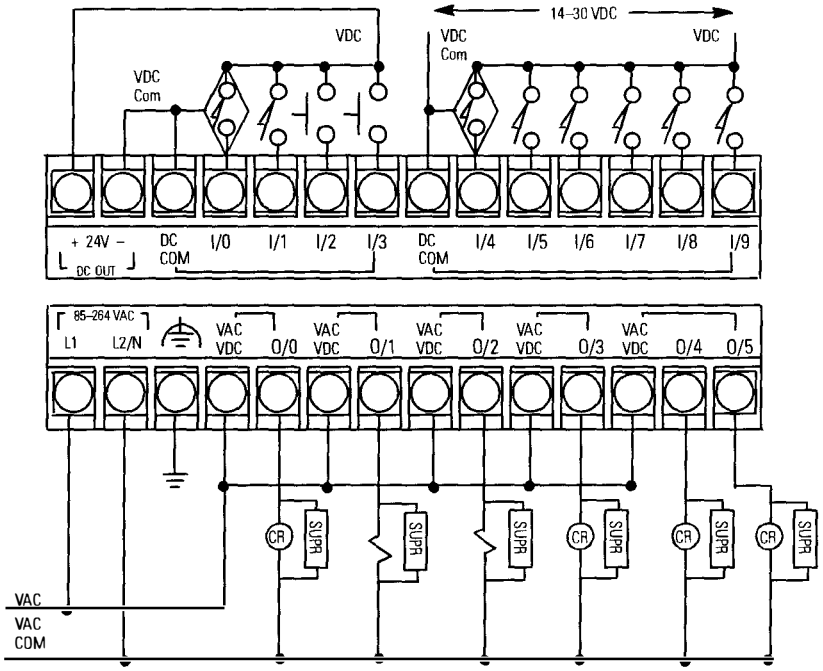

1761-L16BWA Input Voltage Range

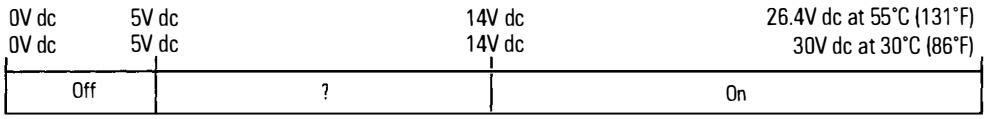

1761-L16BWA Output Voltage Range

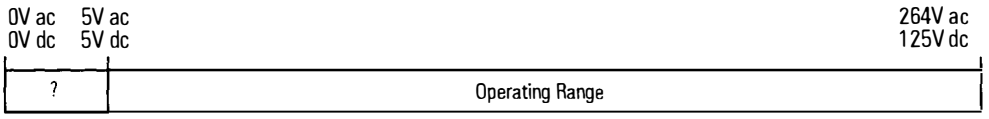

1761-L16NWA AC Wiring Diagram

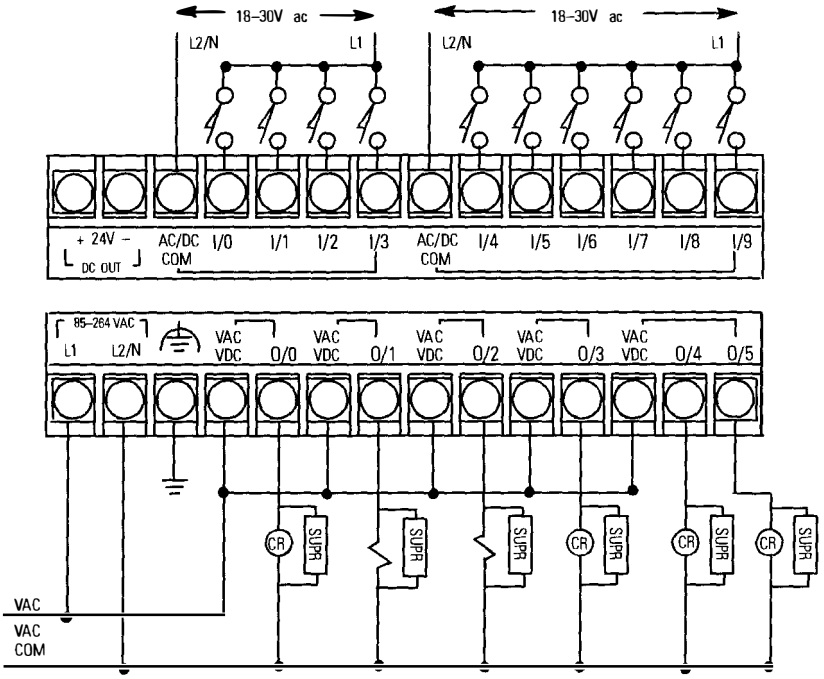

1761-L16NWA AC Input Voltage Range

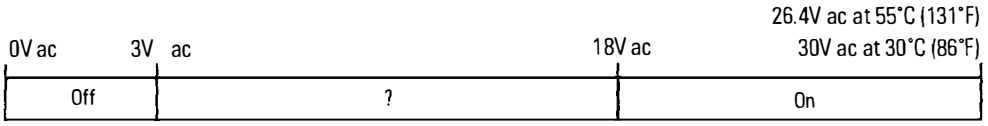

1761-L16NWA AC Output Voltage Range

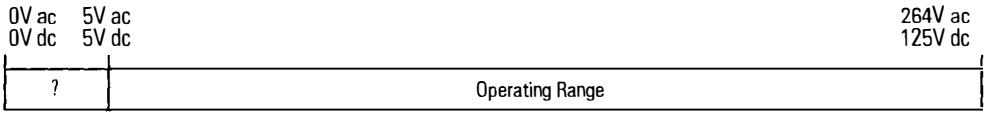

1761-L16NWA DC Wiring Diagram (Sinking Input Configuration)

Note: See page 13 for additional input configuration options.

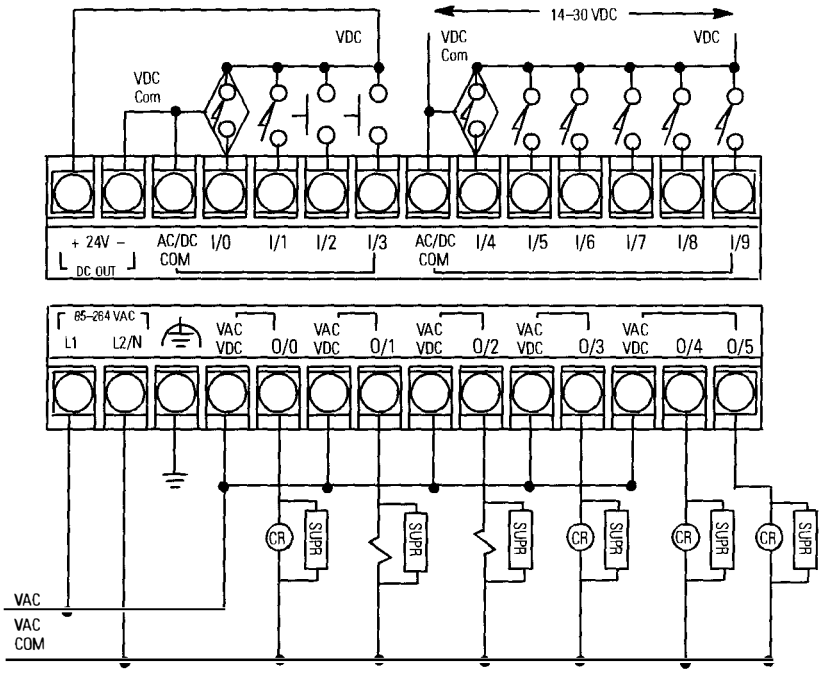

1761-L16NWA DC Input Voltage Range

0V dc 0V dc	5V dc 5V dc	14V dc 14V dc	26.4V dc at 55°C (131°F) 30V dc at 30°C (86°F)
Off	?	On	

1761-L16NWA DC Output Voltage Range

0V ac 0V dc	5V ac 5V dc	264V ac 125V dc
?	Operating Range	

1761-L32BWA Wiring Diagram (Sinking Input Configuration)

Note: See page 13 for additional input configuration options.

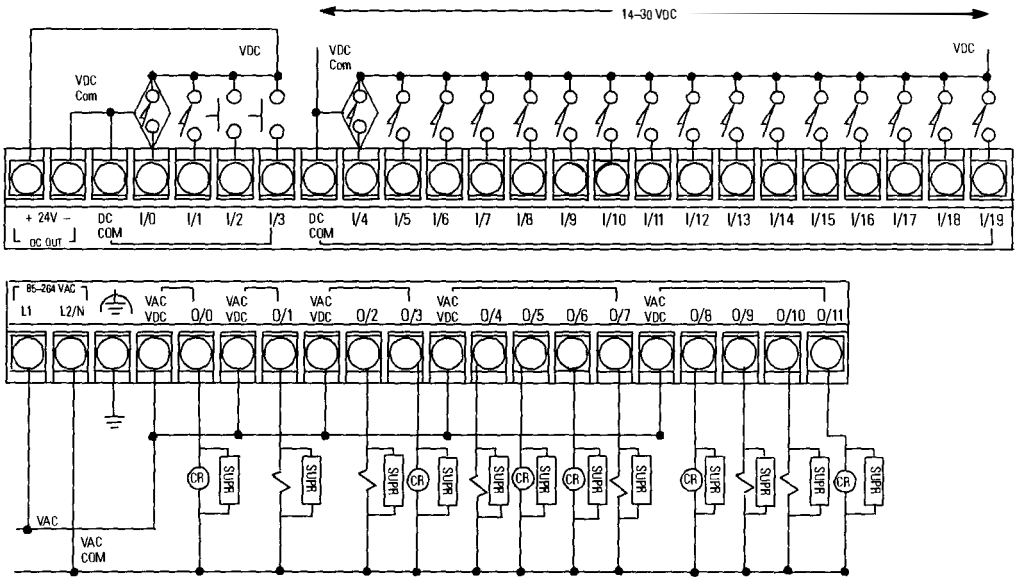

1761-L32BWA Input Voltage Range

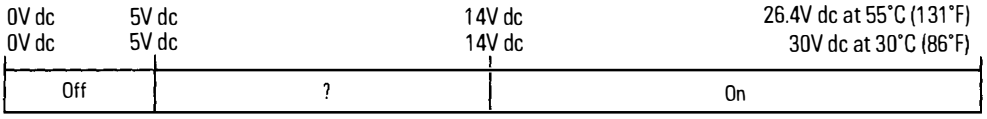

1761-L32BWA Output Voltage Range

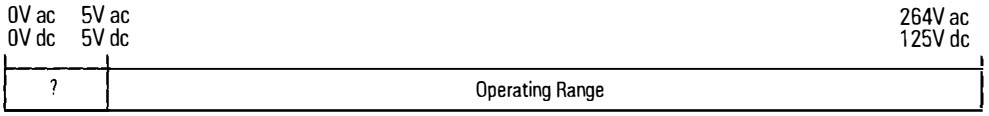

1761-L10BWB Wiring Diagram (Sinking Input Configuration)

Note: See page 13 for additional input configuration options.

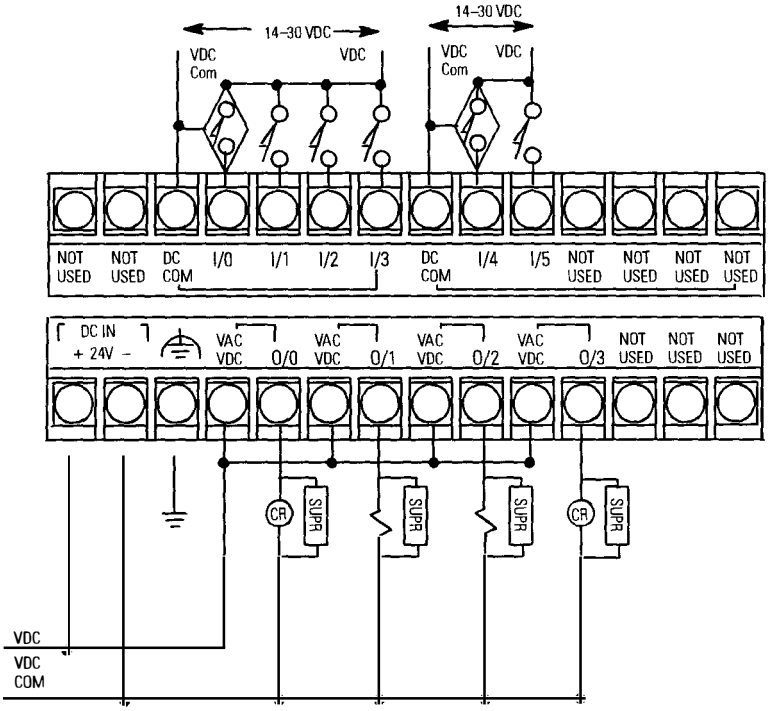

1761-L10BWB Input Voltage Range

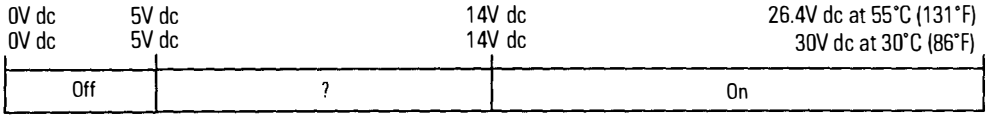

1761-L10BWB Output Voltage Range

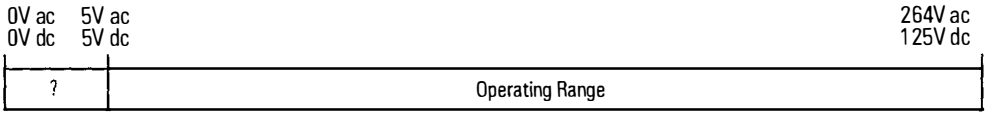

1761-L16BWB Wiring Diagram (Sinking Input Configuration)

Note: See page 13 for additional input configuration options.

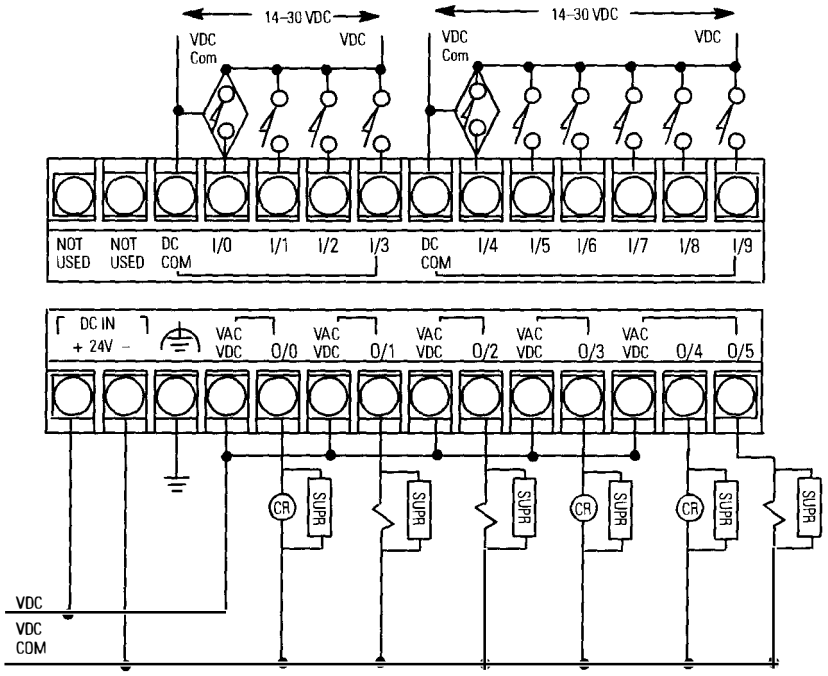

1761-L16BWB Input Voltage Range

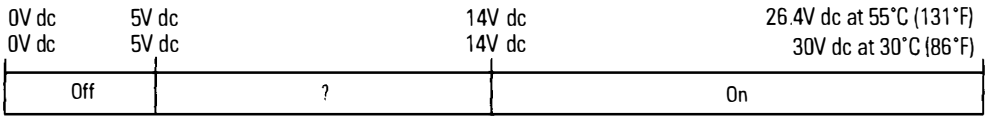

1761-L16BWB Output Voltage Range

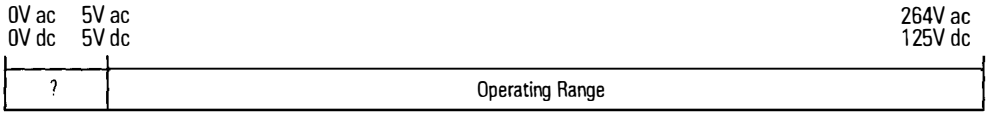

1761-L16NWB AC Wiring Diagram

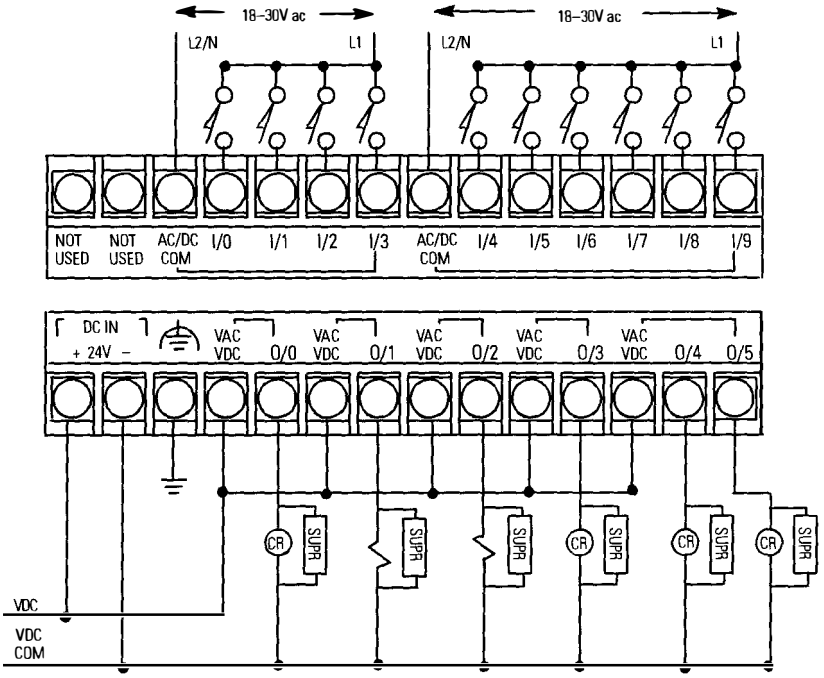

1761-L16NWB AC Input Voltage Range

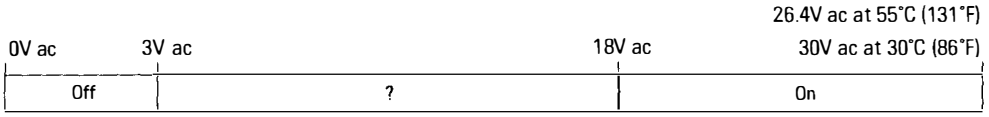

1761-L16NWB AC Output Voltage Range

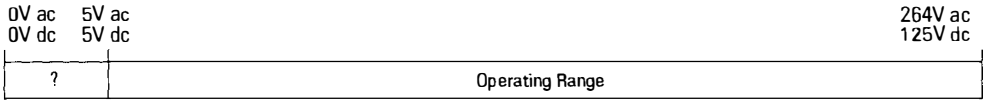

1761-L16NWB DC Wiring Diagram (Sinking Input Configuration)

Note: See page 13 for additional input configuration options.

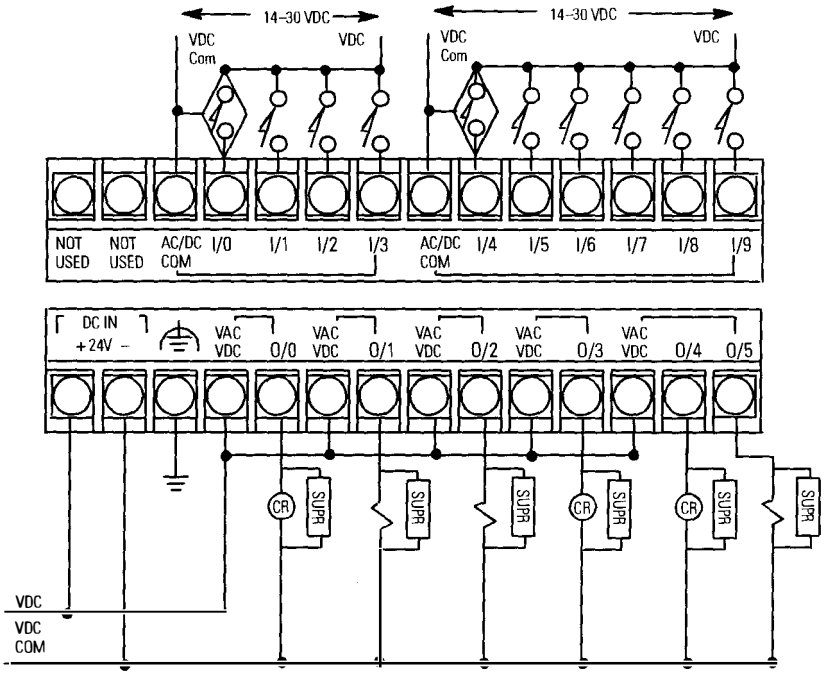

1761-L16NWB DC Input Voltage Range

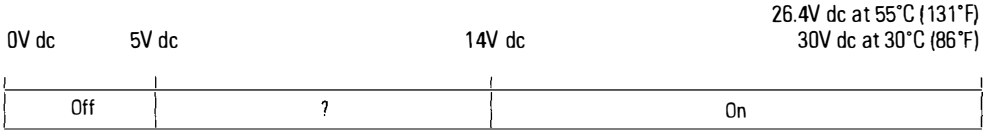

1761-L16NWB DC Output Voltage Range

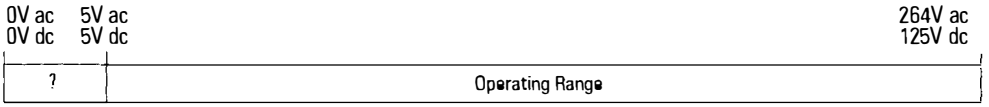

1761-L32BWB Wiring Diagram (Sinking Input Configuration)

Note: See page 13 for additional input configuration options.

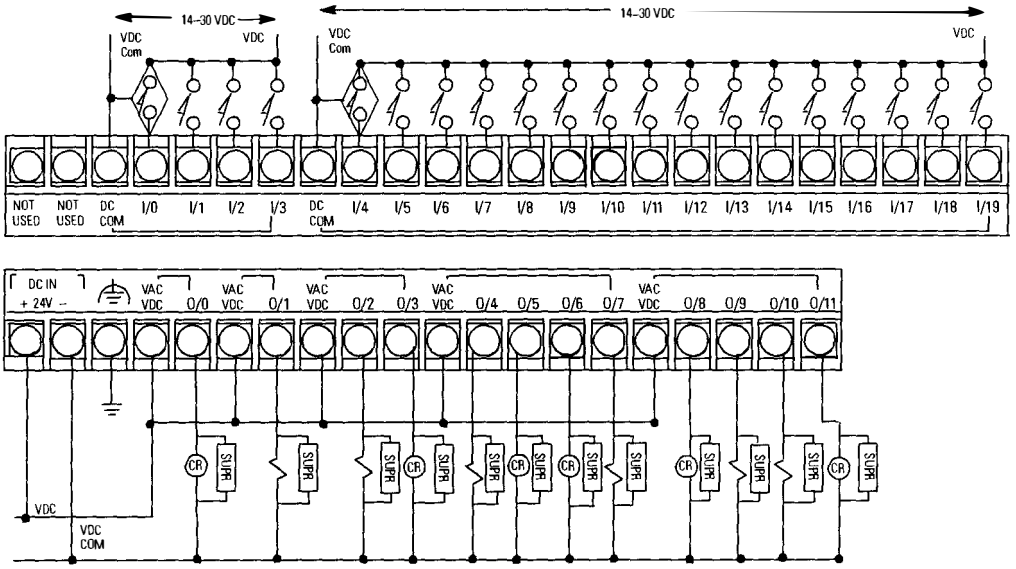

1761-L32BWB Input Voltage Range

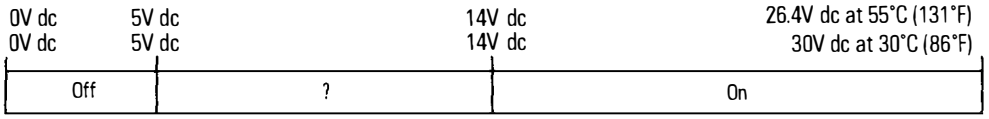

1761-L32BWB Output Voltage Range

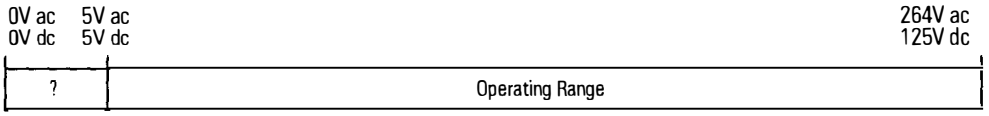

1761-L32AAA Wiring Diagram

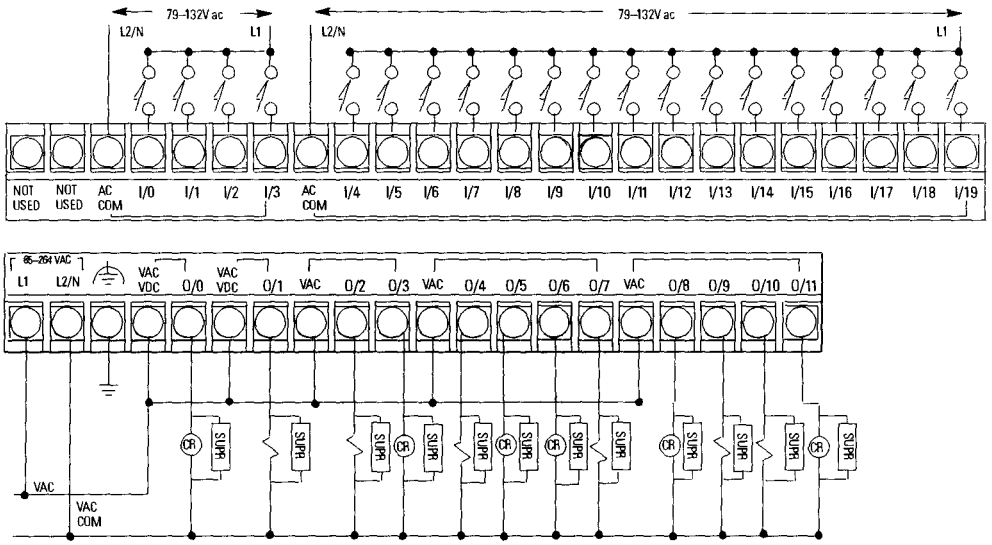

1761-L32AAA Input Voltage Range

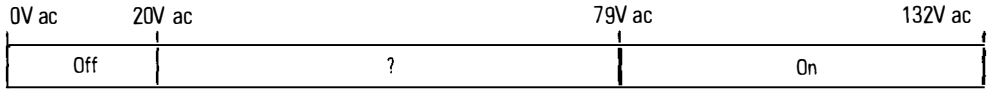

1761-L32AAA Output Voltage Range

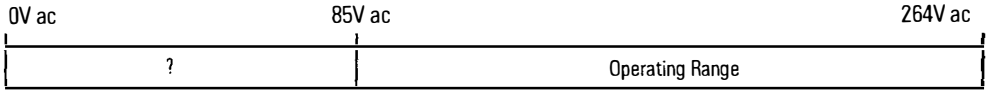

Note: See the 1761-L32AWA wiring diagram on page 122 for relay output voltage range.

1761-L10BXB Wiring Diagram (Sinking Input Configuration)

Note: See page 13 for additional input configuration options.

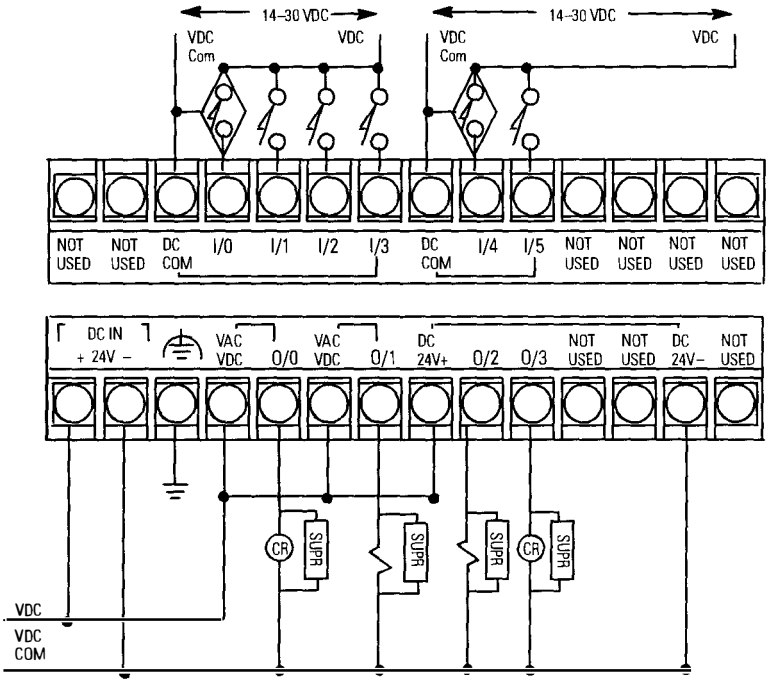

1761-L10BXB Input Voltage Range

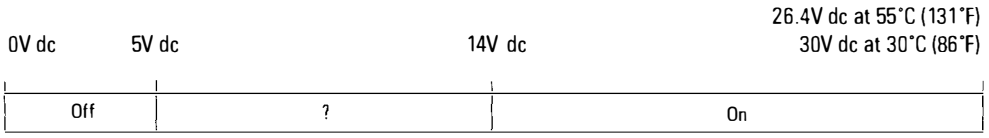

1761-L10BXB Output Voltage Range

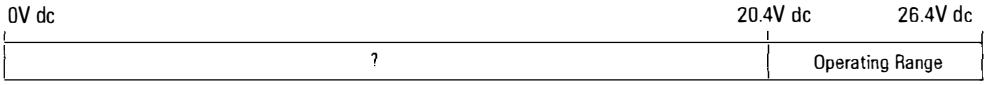

1761-L16BBB Wiring Diagram (Sinking Input Configuration)

Note: See page 13 for additional input configuration options.

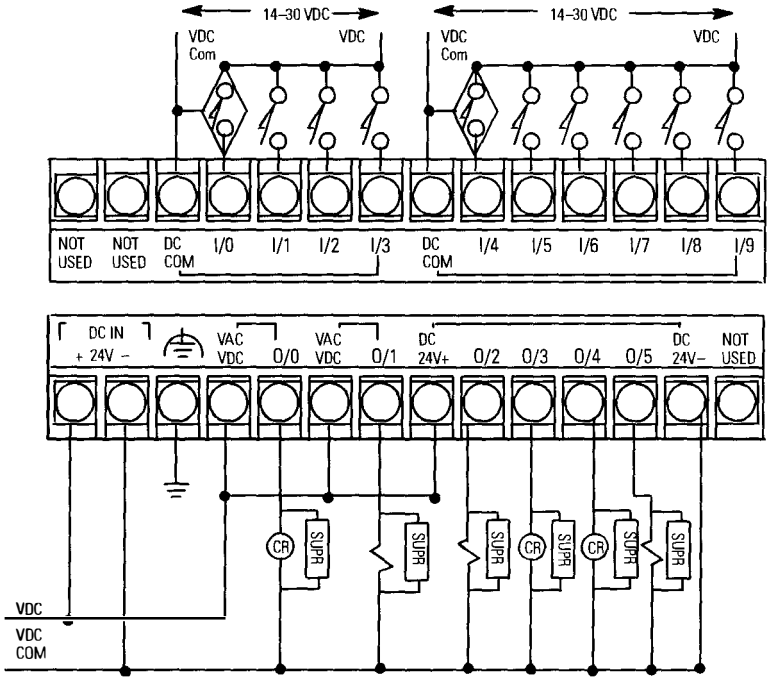

1761-L16BBB Input Voltage Range

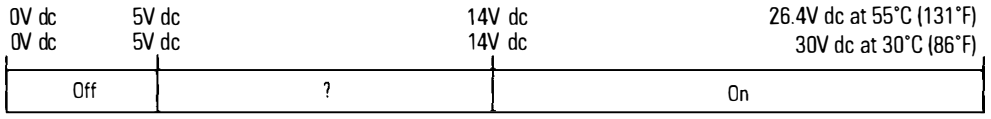

1761-L16BBB Output Voltage Range

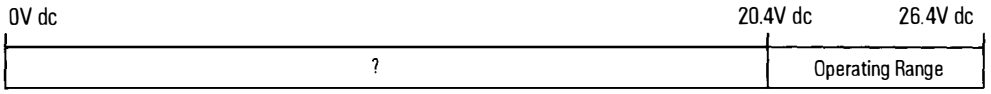

Note: See the 1761-L32AWA wiring diagram on page 122 for relay output voltage range.

1761-L32BBB Wiring Diagram (Sinking Input Configuration)

Note: See page 13 for additional input configuration options.

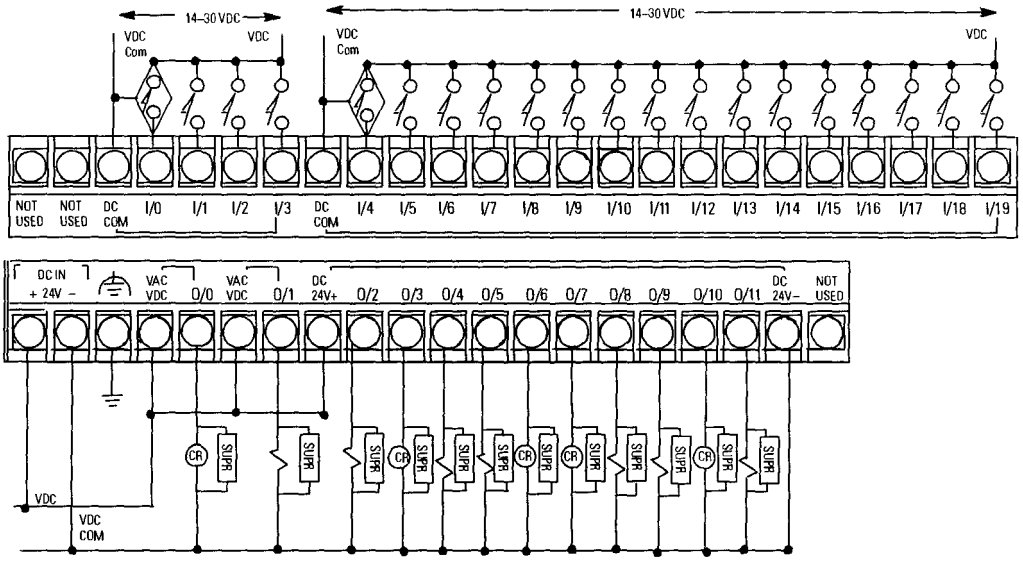

1761-L32BBB Input Voltage Range

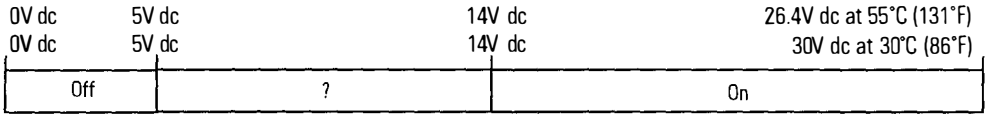

1761-L32BBB Output Voltage Range

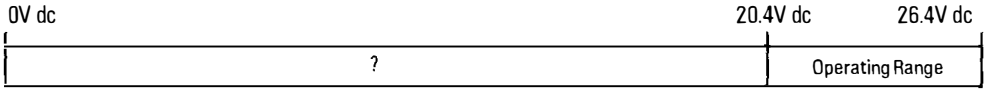

Note: See the 1761-L32AWA wiring diagram on page 122 for relay output voltage range.

1761-L20AWA-5A Wiring Diagram

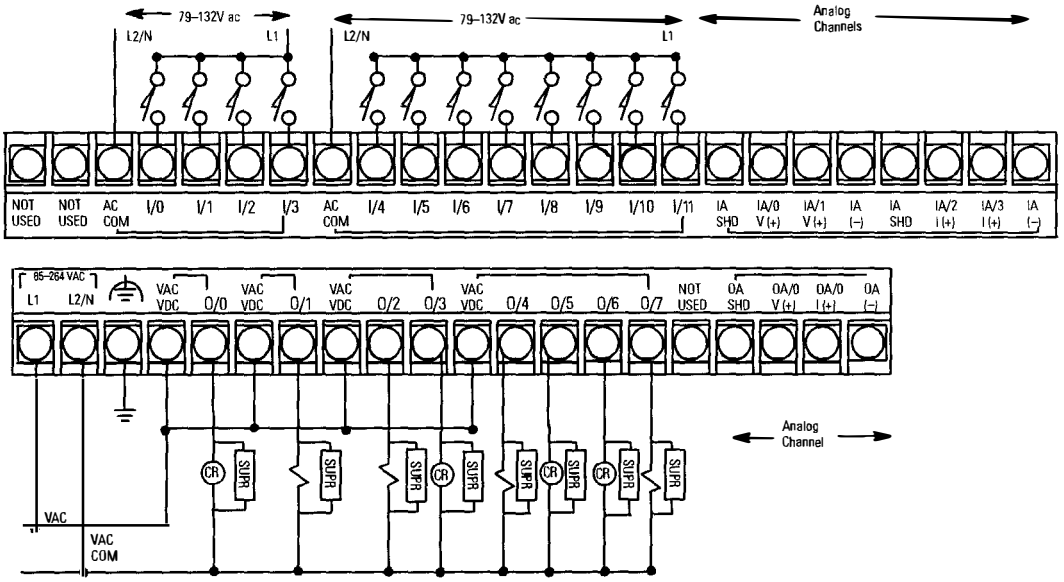

1761-L20AWA-5A Input Voltage Range

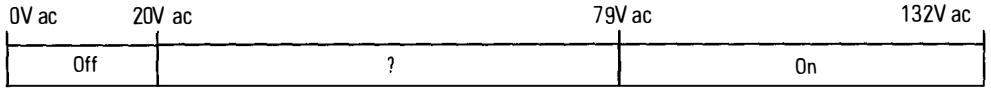

1761-L20AWA-5A Output Voltage Range

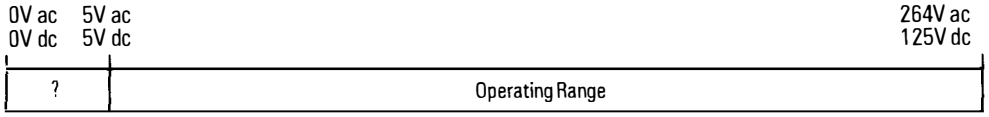

1761-L20BWA-5A Wiring Diagram (Sinking Input Configuration)

Note: See page 13 for additional input configuration options.

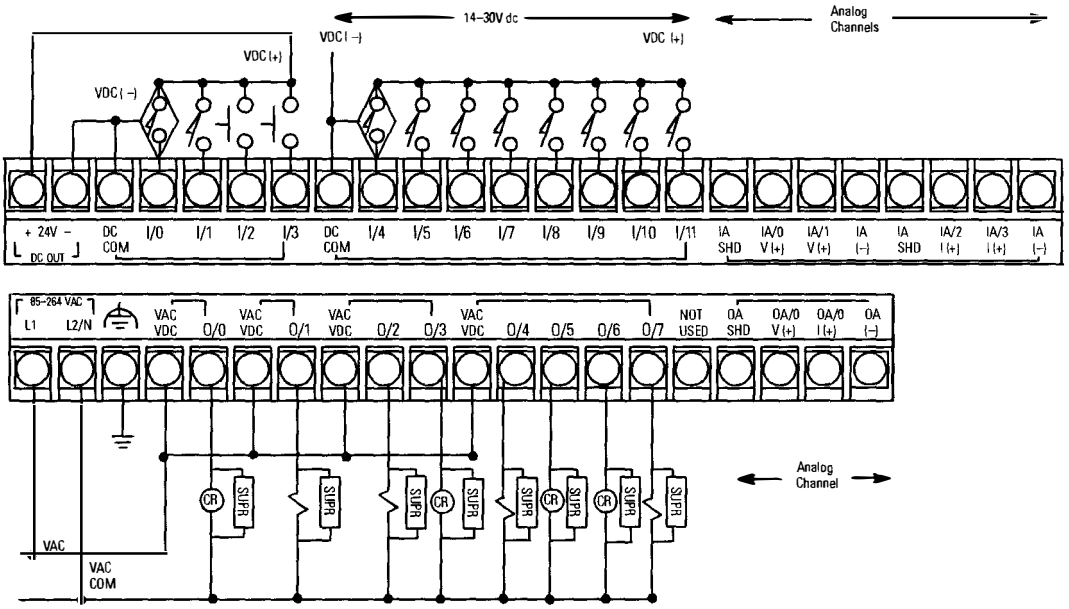

1761-L20BWA-5A Input Voltage Range

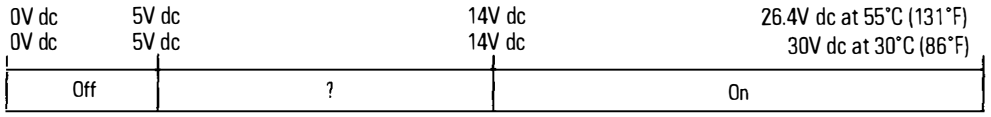

1761-L20BWA-5A Output Voltage Range

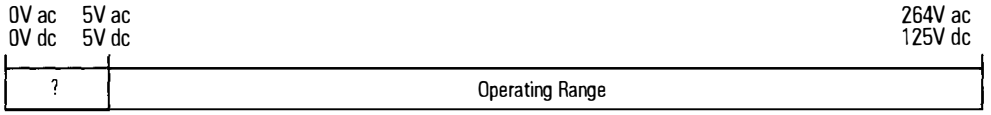

1761-L20BWB-5A Wiring Diagram (Sinking Input Configuration)

Note: See page 13 for additional input configuration options.

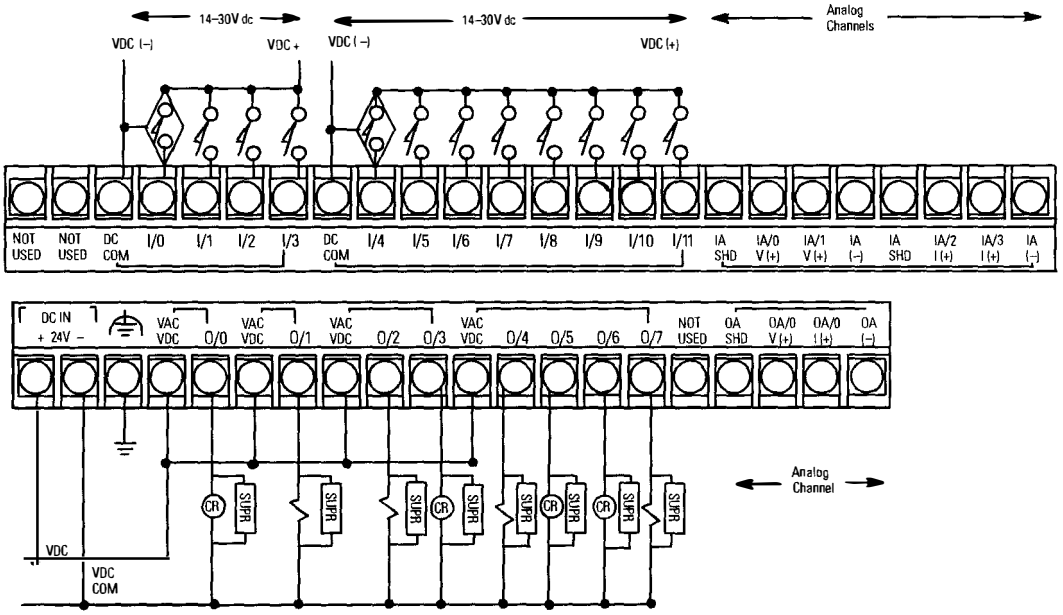

1761-L20BWB-5A Input Voltage Range

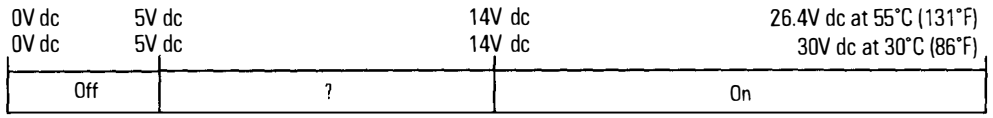

1761-L20BWB-5A Output Voltage Range

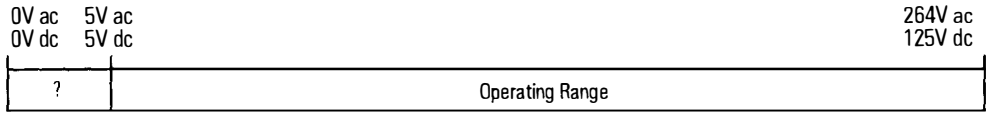

Analog Voltage and Current Input and Output Ranges

Analog Voltage Input Range

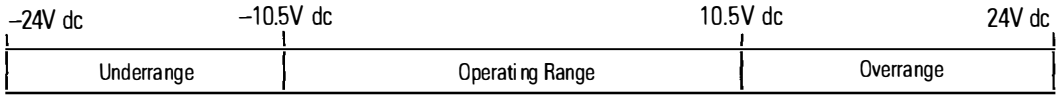

Analog Current Input Range

Note: The analog voltage inputs are protected to withstand the application of ±24V dc without damage to the controller. The analog current inputs are protected to withstand the application of ±50 mA without damage.

Analog Voltage Output Range

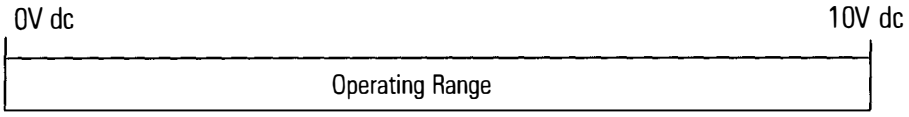

Analog Current Output Range

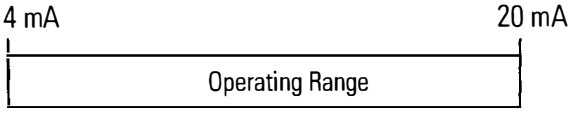

Note: The analog outputs are protected to withstand the short circuiting of the voltage or current outputs without damage to the controller.

Mounting Template

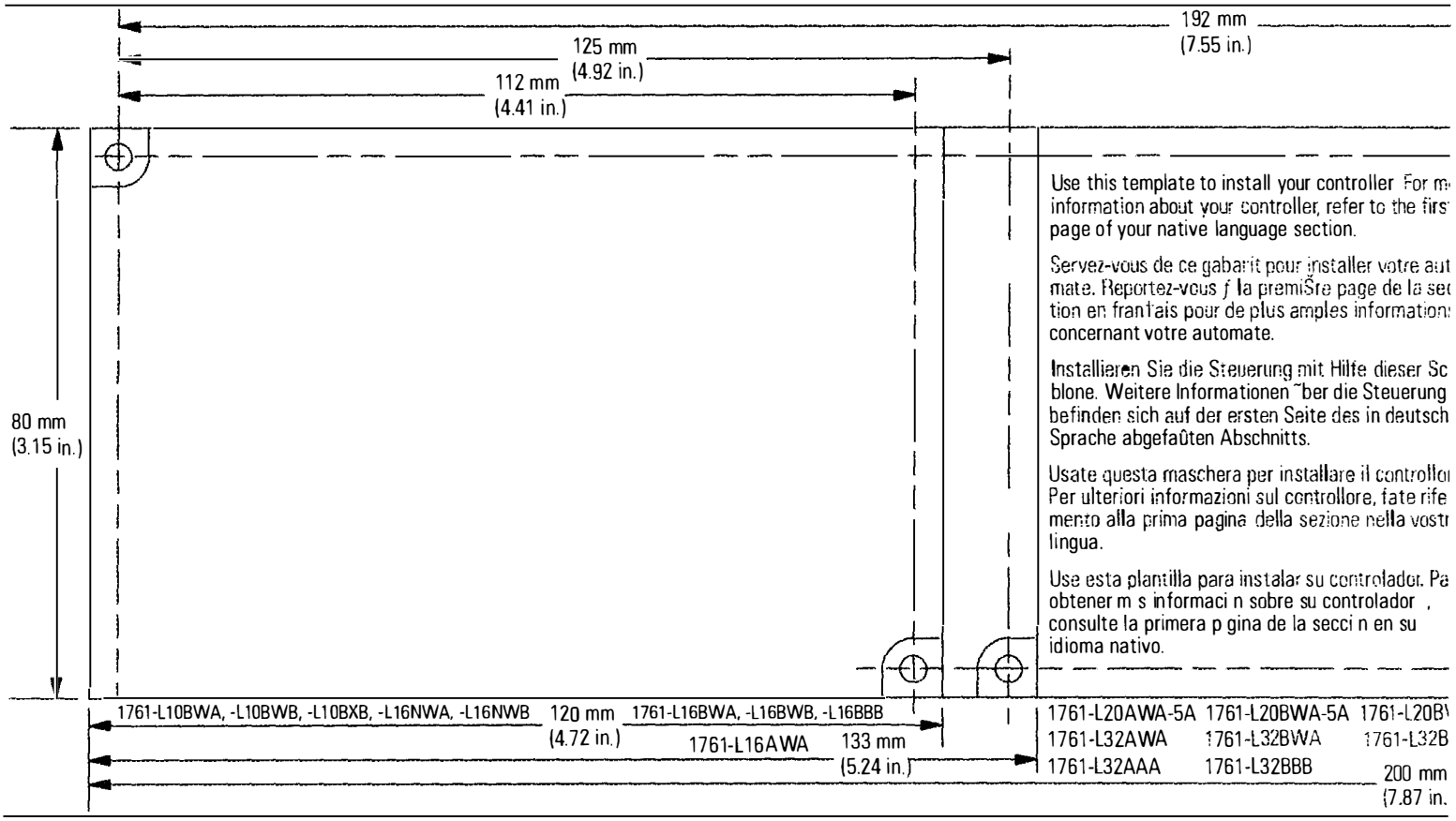

Use this template to install your controller For m information about your controller, refer to the firs page of your native language section.

Servez-vous de ce gabarit pour installer votre aut mate. Reportez-vous ƒ la premiŠre page de la sec tion en franÎais pour de plus amples information concernant votre automate.

Installieren Sie die Steuerung mit Hilfe dieser Sc blone. Weitere Informationen ˜ber die Steuerung befinden sich auf der ersten Seite des in deutsch Sprache abgefaûten Abschnitts.

Usate questa maschera per installare il controllo Per ulteriori informazioni sul controllore, fate rife mento alla prima pagina della sezione nella vostr lingua.

Use esta plantilla para instalar su controlador. Pa obtener m s informaci n sobre su controlador , consulte la primera p gina de la secci n en su idioma nativo.

Publication 1761-IN001B-MU-P - May 2002

www.rockwellautomation.com

Corporate Headquarters
Rockwell Automation, 777 East Wisconsin Avenue, Suite 1400, Milwaukee, WI, 53202-5302 USA, Tel: (1) 414.212.5200, Fax: (1) 414.212.5201

Headquarters for Allen-Bradley Products, Rockwell Software Products and Global Manufacturing Solutions
Americas: Rockwell Automation, 1201 South Second Street, Milwaukee, WI 53204-2496 USA, Tel: (1) 414.382.2000, Fax: (1) 414.382.4444
Europe: Rockwell Automation SA/NV, Vorstlaan/Boulevard du Souverain 36-BP 3A/B, 1170 Brussels, Belgium, Tel: (32) 2 663 0600, Fax: (32) 2 663 0640
Asia Pacific: Rockwell Automation, 27/F Citicorp Centre, 18 Whitfield Road, Causeway Bay, Hong Kong, Tel: (852) 2887 4788, Fax: (852) 2508 1846

Headquarters for Dodge and Reliance Electric Products
Americas: Rockwell Automation, 6040 Ponders Court, Greenville, SC 29615-4617 USA, Tel: (1) 864.297.4800, Fax: (1) 864.281.2433
Europe: Rockwell Automation, Brühlstraße 22, D-74834 Elztal-Dallau, Germany, Tel: (49) 6261 9410, Fax: (49) 6261 17741
Asia Pacific: Rockwell Automation, 55 Newton Road, #11-01/02 Revenue House, Singapore 307987, Tel: (65) 351 6723, Fax: (65) 355 1733

Publication 1761-IN001B-MU-P - May 2002 PN 40072-057-01(2)

Supersedes Publication 1761-5.1.2 - April 1999

Copyright © 2002 Rockwell Automation. All rights reserved. Printed in the U.S.A.