INSTRUCTIONS

GEI-54035

MEDIUM TRANSFORMERS

AUTOMATIC GAS-CONTROL TRANSFORMERS

INTRODUCTION

The automatic gas-control equipment maintains an atmosphere of dry nitrogen under a slight pressure between the top oil surface and the transformer cover. This isolates the oil in the transformer from the outside air preventing oxygen, moisture and other contaminants from being absorbed. The nitrogen is supplied from a gas cylinder and is admitted to the transformer through a three-stage automatic gas regulator.

The transformer gas space is sufficiently large to allow for normal expansion and contraction of the oil. An automatic bleeder is provided to relieve any excessive pressures which may occur as a result of seasonal high temperatures or heavy load conditions. As lower temperatures are encountered and the pressure drops off, the gas regulator will automatically add gas to maintain a positive pressure.

The gas cylinder, regulator and supervisory equipment are mounted in a weatherproof cabinet attached to the transformer. See Fig. 1. During shipment the gas cylinder and regulator are removed and when necessary, the cabinet itself may also be removed.

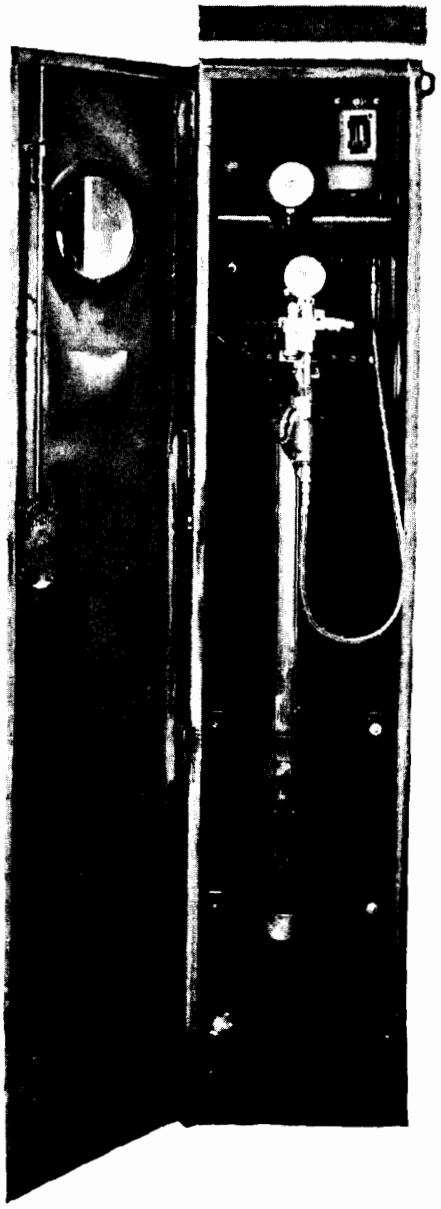

Fig. 1. Gas control cabinet with accessories

DESCRIPTION

The automatic control equipment, shown in Fig. 2, consists of a three-stage gas regulator, sump, gages, automatic bleeder and a transformer low-pressure alarm switch. Alarms for transformer high-pressure and cylinder low-pressure can also be furnished upon request.

GAS CYLINDER AND VALVE

The nitrogen cylinder high-pressure valve has a double-seat construction as shown in Fig. 3. *To prevent gas leakage past the valve stem, the valve must be either tightly closed against the main valve seat or fully opened against the back seat.* In the open position, section B is held tight against section A by the screw-driver action

These instructions do not purport to cover all details or variations in equipment nor to provide for every possible contingency to be met in connection with installation, operation or maintenance. Should further information be desired or should particular problems arise which are not covered sufficiently for the purchaser's purposes, the matter should be referred to the General Electric Company.

GENERAL ELECTRIC

of the valve. A relief disk is provided on the side of this high-pressure valve. If for any reason the gas pressure in the cylinder should increase to dangerous proportions, this disk will rupture and allow the gas to escape to the atmosphere.

GAS REGULATOR

The automatic gas regulator, Fig. 2A, is a three-stage device which serves to reduce the high pressure of the gas cylinder to a suitable value for application in the transformer tank. The first two stages of the regulator are set to deliver gas at 65 and 11 psi respectively, with a relief value located between the two stages. The third stage is set to admit gas to the transformer when the pressure in the tank drops to 0.30 psi and will automatically shut itself off when the pressure builds up to 0.55 psi. *Do not change any of these settings!*

Cylinder-Pressure Gage

The cylinder-pressure gage (1) indicates the nitrogen pressure in the gas cylinder. If desired, the gage can be supplied with alarm contacts to indicate low cylinder pressure. The contacts have an a-c rating of 10 amps at 115 volts or 5 amps at 230 volts and, unless otherwise specified, will be set to close when the pressure drops below 200 psi.

SUPERVISORY ASSEMBLY

The supervisory assembly, Fig. 2B, consists of sump (10), valves (6 and 8), transformer pressure gage (7), transformer low-pressure alarm switch (9), bleeder (11), and when requested, a transformer high-pressure alarm switch (not shown).

Sump and Valves

A sump compartment is provided to prevent the oil vapor, which condenses in the gas piping, from entering the regulating equipment. Valve (8) is for use in draining the sump at regular intervals and valve (6) is furnished for the purpose of maintaining the transformer seal while gas cylinders are being changed and for making leak test.

Transformer Pressure Gage

This gage indicates the pressure in the transformer gas space.

Transformer Low-Pressure Alarm Switch

Transformer low-pressure alarm contacts are provided by a self-resetting mercury switch (9). See Fig. 4. The contacts have an a-c rating of 10 amps at 115 volts or 5 amps at 230 volts and unless otherwise specified, will be set to close at 4 ounces per square inch and to reopen at 6 ounces per square inch. A nameplate on the device indicates its operating pressures. Do not allow the leads of the mercury switch to come in contact with anything that might impede operation of the switch.

Bleeder

Bleeder (11) automatically releases gas to the atmosphere whenever the pressure within the transformer builds up to the maximum operating pressure (as indicated on the transformer nameplate and the knurled screw cap of the bleeder).

Transformer High-Pressure Alarm Switch

When transformer high-pressure alarm contacts are requested, a bellows-operated, snap-action switch is provided which closes its contacts when the tank pressure becomes abnormally high. The contacts have an a-c rating of 10 amps at 115 volts or 5 amps at 230 volts and unless otherwise specified, are set to close at 1.25 psi above the maximum tank operating pressure.

INSTALLATION

Install the control cabinet (if shipped separately) as shown on the transformer outline drawing. Install any gas piping that has been removed. Where compression-type gas fittings are used, be sure that the small metal sleeve that is force-fitted to the piping is in place before a pipe connection is made. Bolt the gas cylinder in place in the cabinet.

The coupling between the gas regulator and cylinder is of the ball-joint construction. Unless the seats are in perfect condition there will be a gas leakage. It is recommended that each time an assembly is made, the ball joint on both the regulator and cylinder be cleaned with very fine steel wool. Remove all metal particles or foreign material before assembling. *Do not use* emery cloth or sand paper.

Before connecting the regulator, open the gas cylinder valve slightly to remove any dust which may have accumulated and make sure the threads are clean and in good condition. Open valves (6) and (8), Fig. 2, to allow any oil present to drain from the piping and sump. Attach the regulator to the gas cylinder and connect the flexible tubing to the third stage of the regulator.

APPLYING THE GAS SEAL

With valves (6) and (8) closed, open the gas cylinder valve *very slowly* to avoid a sudden shock on the regulator. With the regulator operating properly, pressure gage (7) should indicate approximately ½ psi. If this is the

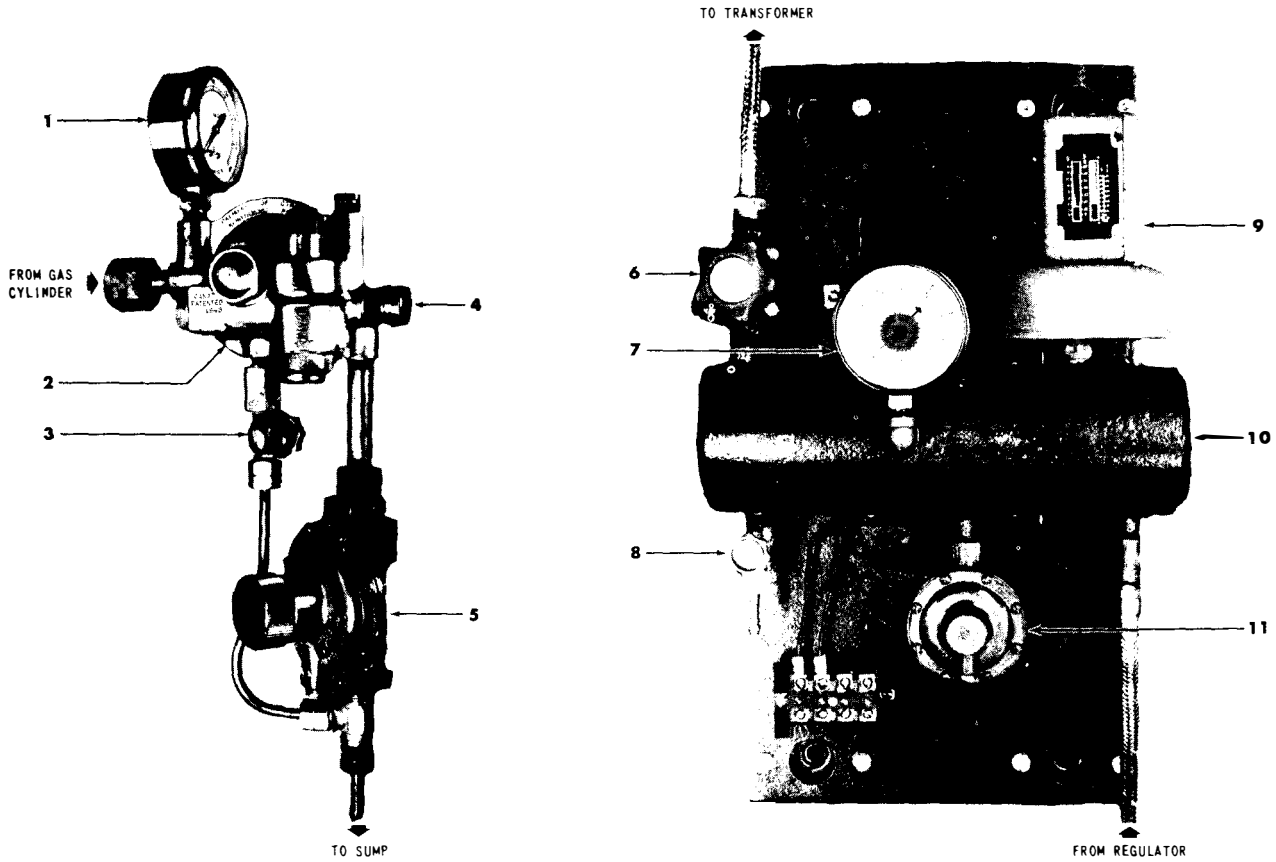

A. GAS REGULATOR *B. SUPERVISORY ASSEMBLY*

1. *Gas cylinder pressure gage*
2. *First two stages of regulator*
3. *Third stage bypass valve*
4. *Relief valve*
5. *Third stage of gas regulator*
6. *Transformer feeder valve*
7. *Transformer pressure gage*
8. *Sump drain valve*
9. *Transformer low-pressure alarm switch*
10. *Sump*
11. *Automatic bleeder*

Fig. 2. Gas control equipment

case, valve (6) may be opened to pressurize the transformer. Make sure the gas cylinder valve is fully opened to complete its seal and that all valve stem packing glands are tight. Also make sure the oil in the transformer is at the proper level, since any excess will cause an unnecessary loss of gas at normal operating temperatures.

If it is desired to make a leak test or to check operation of the regulator before placing the transformer in service, proceed as outlined under "Gas Leaks" or "Regulator Test."

During the first few weeks of operation, the small amount of oxygen in the space above the oil will combine chemically with the oil, leaving only nitrogen. However, if it is the User's practice to purge the gas space with dry nitrogen, this can be done by opening the gas sampling valve on the transformer control center and opening third stage bypass valve (3). Allow nitrogen (from the second stage at 11 psi) to flow until the escaping gas tests five percent oxygen or less. After 24 hours, analyze the gas again and repeat the flushing operation if necessary. No more than three flushings should be required.

MAINTENANCE

Over a period of time oil vapor from the transformer will condense in the gas piping and collect in the sump (10). Drain valve (8) should be opened occasionally to remove this oil and prevent it from entering the regulator. To change gas cylinders, close feeder valve (6) and the gas cylinder valve. Disconnect the regulator and install the new cylinder, making sure that the fittings are clean and in good condition. Re-establish the gas seal as explained under "Installation."

NOTE—If for any reason a vacuum is to be drawn on the transformer, the gas control equipment must be protected by closing feeder valve (6).

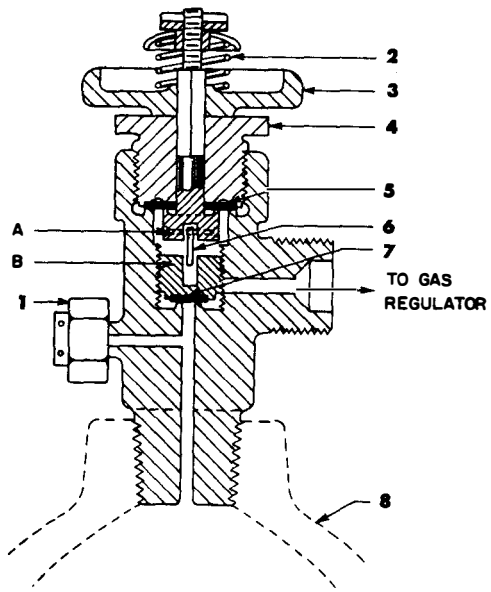

1. *Relief disc*
2. *Compression spring*
3. *Hand wheel*
4. *Gland*
5. *Packing (back seat)*
6. *Driver pin*
7. *Main valve seat*
8. *Gas cylinder*

Fig. 3. Gas cylinder valve shown in closed position

NITROGEN CYLINDERS

It is recommended that a spare gas cylinder be kept on hand at all times. Orders for this gas should specify "Special dry nitrogen to General Electric specification D27A3A2". It can be purchased from the Air Reduction Sales Company in cylinders containing 220 cu. ft. of gas at atmospheric pressure, compressed to 2000 psi at 70F. Filled cylinders are carried in stock and empty ones can be refilled at the following locations. Empty cylinders should be returned with a slight positive pressure to avoid contamination.

Acton, Albion (bulk only), Alton, Arlington, Atlanta, Baltimore, Baton Rouge, Beaumont, Bethlehem, Bettendorf, Birmingham, Boston, Buffalo, Calvert City, Central Falls, Charlotte, Chicago, Cincinnati, Cleveland, Corpus Christi, Dayton, Detroit, El Paso, Flint, Grand Rapids (OP only), Houston, Jersey City, Johnstown, Louisville, Midland, Milwaukee, Minneapolis, Mobile, New Orleans, Oklahoma City, Pittsburgh, Richmond, Riverton, St. Louis, Shreveport, Waycross, Wheeling, Wichita.

EXCESSIVE LOSS OF GAS

Excessive consumption of gas can be the result of a high oil level, abnormal loading, a defective regulator or leaks. If the oil is at its proper level and load changes have been nominal, the cause can be determined by keeping a log of oil temperature, transformer pressure and gas cylinder pressure. If the losses continue while the transformer pressure remains above ½ psi, gas is most likely entering the tank at too high a pressure, resulting in excessive operation of the bleeder. Tighten the third stage bypass valve (3) and if this does not correct the difficulty, check the regulator as explained under "Defective Regulator". If a large pressure reduction occurs in the transformer without a corresponding change in temperature, make an inspection for leaks.

Gas Leaks

While the factory subjects all transformers to a thorough test for leaks, and every effort is made to produce airtight tanks and accessories, leaks do occasionally develop. (The loss from a gas leak at the rate of 1/16-inch bubble per second amounts to only 2¼ cu ft. per year, which is practically negligible considering that the gas cylinder holds 220 cu ft. at atmospheric pressure).

To test for leaks, separate the transformer and its gas piping from the sump, gages, regulator and gas cylinder by closing feeder valve (6). Open third stage bypass valve (3) and allow the pressure on gage (7) to increase until it is slightly less than the operating pressure for bleeder (11). Close the gas cylinder valve and observe pressure gage (7). The pressure should remain constant, although a drop not exceeding ½ psi per hour is permissible since this results in a loss of only a few cubic feet per year.

A decline in pressure on the gas cylinder gage (1) does not necessarily indicate a leak, as the small volume of high-pressure gas locked between the valve and regulator may escape along the stem of the gas cylinder valve. During normal operation, the valve should be tight against the back seat and no gas should escape around the stem unless the back seat has developed a leak.

If the pressure drop on gage (7) is more than ½ psi per hour, apply a solution of one part water and one part liquid soap to the valve stems, couplings, gasketed joints and flexible hose. Apply the solution with a squirt can rather than a brush so that no bubbles will form and make a thorough examination for bubbles created by leaking gas.

If repairs are made or no leaks are found, but the pressure continues to fall off, the transformer low-pres-

sure alarm switch, the transformer high-pressure alarm switch (if furnished), or perhaps the pressure gage itself may be at fault. They can be checked by removing one at a time and plugging the holes—or in the case of the gage, by replacing with another.

To check the high-pressure system, close bypass valve (3), *slowly* open the gas cylinder valve, and make a soap solution test of all high pressure components from the gas cylinder to the third stage of the regulator. If the coupling between the gas cylinder and regulator leaks, remove the regulator and thoroughly clean both surfaces of the ball joint with fine steel wool. Slightly open the cylinder valve to blow out any dust and reassemble the coupling, making sure connections are tight.

To check the second half of the system consisting of the transformer and the gas piping to it, close valve (3) and *slowly* open the gas cylinder valve. Open valve (6) and then open valve (3) until the pressure on the transformer builds up to a value slightly less than the operating pressure for bleeder (11). Close valve (3) and the cylinder valve and observe pressure gage (7) over a period of 6 to 24 hours. If there is an appreciable drop, continue the soap solution test of all joints and components associated with the transformer gas space.

If a thorough examination by the liquid soap method fails to locate the leak or leaks, a more sensitive test can be made by the use of a halogen leak detector, as explained in instructions furnished with that equipment. Complete the test as rapidly as possible and then thoroughly flush the gas space with nitrogen or exhaust with a vacuum line to purge out the halogen gas.

If any components are found to be defective, replacements can be ordered from the nearest Apparatus Sales Office of the General Electric Company. *A leaking cylinder-pressure gage (1) requires a complete new regulator.*

Regulator Test

To check the operation of the complete three-stage regulator, close valves (3) and (6) and *slowly* open the gas cylinder valve until it is tight against the back seat. Note the pressure, as indicated on pressure gage (7), at equal time intervals. If the regulator is functioning properly the pressure should not rise. Due to the small gas volume involved, a slight increase such a ½ psi per hour is permissible. If the pressure rises appreciably, it is an indication that the third stage of the regulator is defective or that the third-stage bypass valve (3) is open slightly.

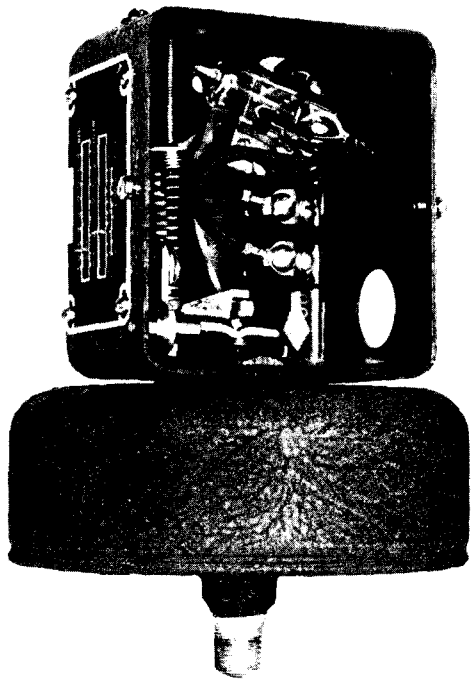

Fig. 4. Transformer low-pressure alarm switch

If the regulator is found to be faulty, do not attempt to repair it and do not return it to the regulator manufacturer. Contact the nearest Apparatus Sales Office of the General Electric Company for a replacement and return of the defective regulator.

Persistent Gas Loss

If difficulty is experienced in locating the trouble, take readings of ambient and top-oil temperatures, tank and cylinder pressures and load conditions at least every four hours over a period of several days. Send this data, along with the rating and serial number of the transformer, to the nearest Apparatus Sales Office for the General Electric Company. A study of the data will then be made to determine what steps should be taken.

MEDIUM TRANSFORMER DEPARTMENT

GENERAL ELECTRIC

ROME, GEORGIA

2-59 (1M)

PRINTED IN U.S.A.